PRODUCT INFORMATION PACKET

Model No: LM34128
Catalog No: LM34128
15 HP Special Voltage Motor, 3 phase, 1800 RPM, 200/400 V, 254T Frame, ODP
Special Voltage Motors

Regal and Leeson are trademarks of Regal Rexnord Corporation or one of its affiliated companies.
©2021 Regal Rexnord Corporation, All Rights Reserved. MC017097E

Nameplate Specifications

Output HP	15 Hp	Output KW	11.2 kW
Frequency	60 Hz	Voltage	200/400 V
Current	44.0/22.1 A	Speed	1770 rpm
Service Factor	1.15	Phase	3
Efficiency	93 %	Power Factor	78.5
Duty	Continuous	Insulation Class	F
Design Code	A	KVA Code	J
Frame	254T	Enclosure	Drip Proof
Thermal Protection	No	Ambient Temperature	40 °C
Drive End Bearing Size	6309	Opp Drive End Bearing Size	6208
UL	Recognized	CSA	Y
CE	Y	IP Code	12
Number of Speeds	1		

Technical Specifications

Electrical Type	Squirrel Cage Induction Run	Starting Method	Wye Start Delta Run
Poles	4	Rotation	Reversible
Resistance Main	.48 Ohms	Mounting	Rigid Base
Motor Orientation	Horizontal	Drive End Bearing	Ball
Opp Drive End Bearing	Ball	Frame Material	Rolled Steel
Shaft Type	T	Overall Length	22.32 in
Frame Length	15.45 in	Shaft Diameter	1.625 in
Shaft Extension	4 in	Assembly/Box Mounting	F1/F2 CAPABLE
Connection Drawing	005517.01	Outline Drawing	SS86503LN-1545

This is an uncontrolled document once printed or downloaded and is subject to change without notice. Date Created:10/12/2021

A- SS86503LN

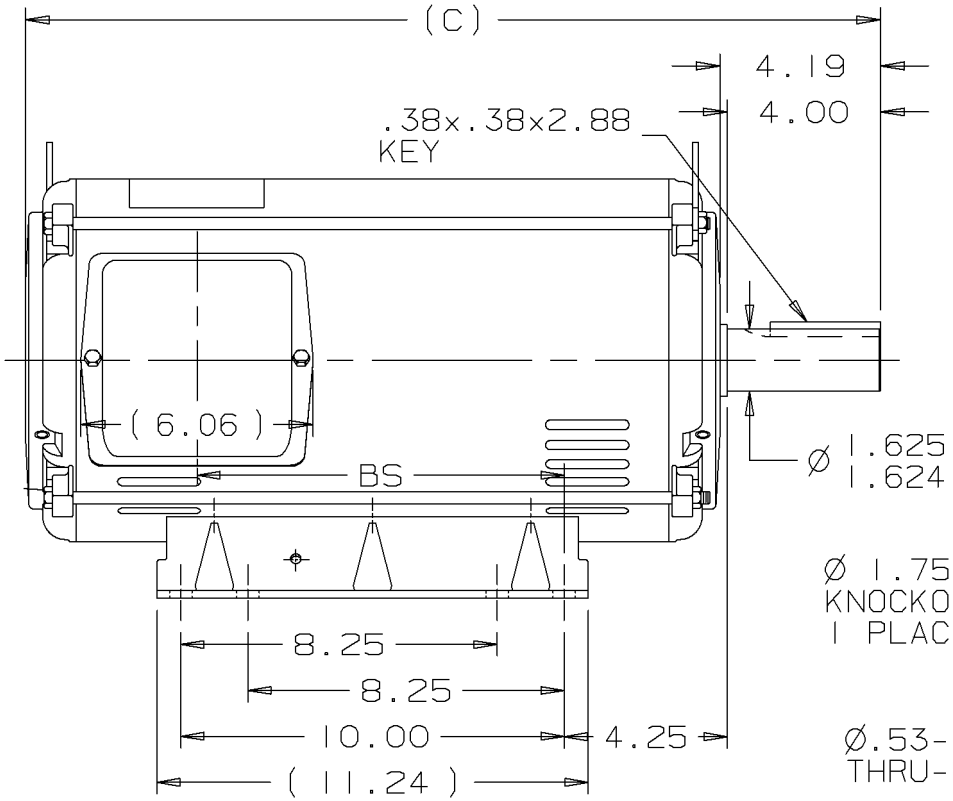

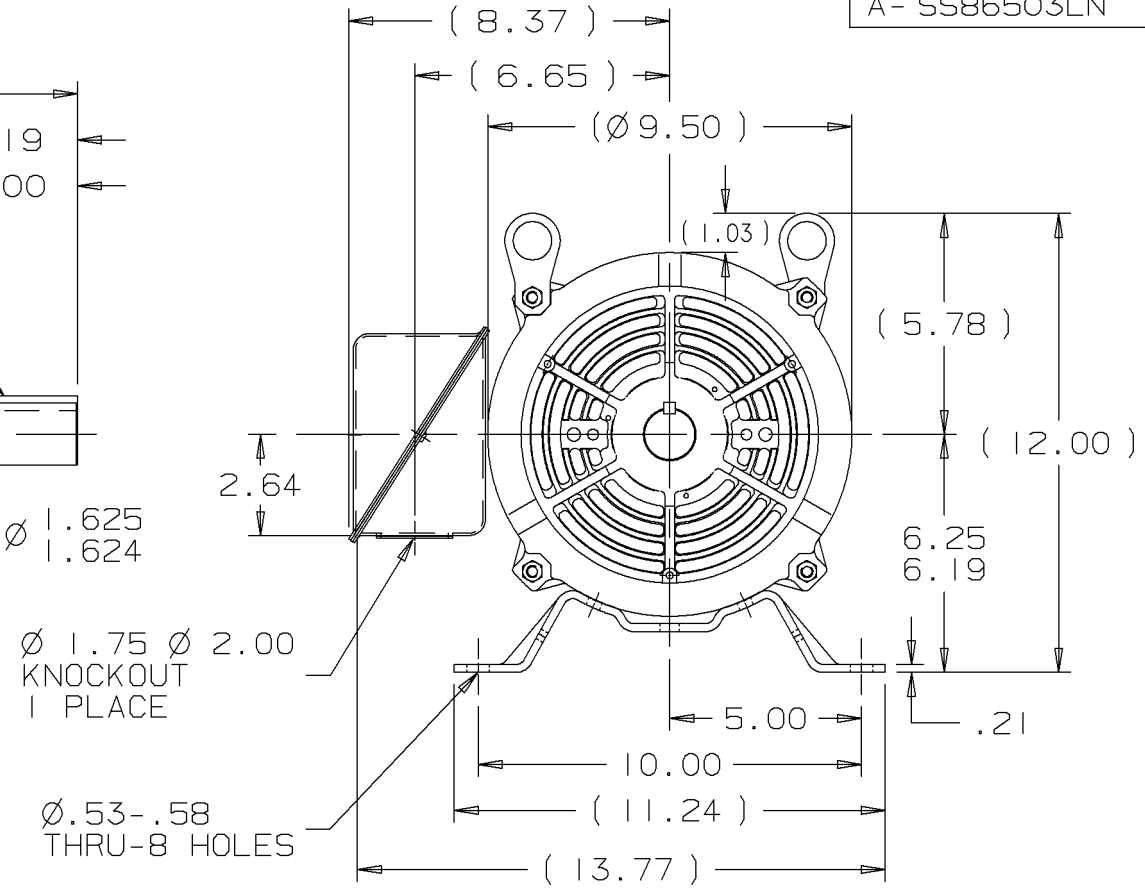

DASH	FR.	C	BS	MOUNTING
1370	254T	20.57	7.68	F1 OR F2
1545	254T/256T	22.32	9.43	F1 OR F2

NOTES:
1. NAMEPLATE TO BE READ FROM C'BOX SIDE OF MOTOR.
2. BOX CAN BE MOUNTED IN 90° STEPS.
3. BOX CAN BE MOUNTED ON OPPOSITE SIDE BY REMOVING BRACKETS AND TURNING FRAME 180°. (EXCEPT AS NOTED.)
4. F2 MOUNT -USES 2ND HOLE ON 1370 FRAME.

REV	DATE	CHANGE	NAME
2	01-31-2000	UPDATED CONDUIT BOX PER CN 28427	TJB
1	07-20-1999	NEW DRAWING	TRB

Lincoln MOTORS

UNLESS OTHERWISE SPECIFIED DIMENSIONS ARE IN INCHES
TOL. ON XX± .02 XXX± .005 XXXX± .0005 ANGLES± 7'30"

MAX. SURFACE ROUGHNESS UNLESS OTHERWISE NOTED
FINISH
MATERIAL

DRAWN BY	TRB	07-20-1999
CHKD BY	ML	07-20-1999
APPD BY	GK	07-20-1999

PART NAME OUTLINE
250 FR. - BB - DR.PR.

DRWG NO A- SS86503LN

L | PURCHASED | CADD FILE NO. | SS86503LN

9/5/2007 5:16:42 AM -

```
ERROR: syntaxerror
OFFENDING COMMAND: --nostringval--

STACK:

/RS
-dictionary-
/Pscript_WinNT_Compat
-dictionary-
```

Uncontrolled Copy

005517.01

ROTATION CAN BE REVERSED BY
INTERCHANGING ANY TWO LINE LEADS

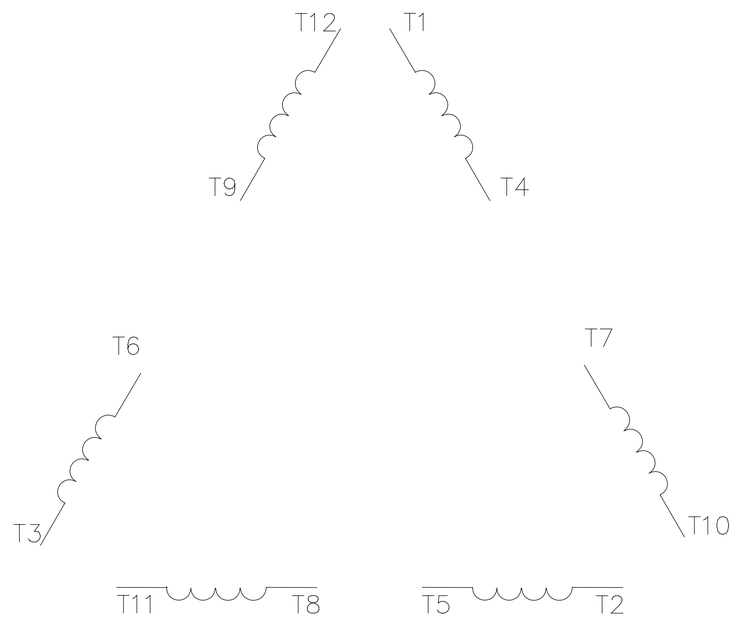

HIGH VOLTAGE

START (1Y) – RUN (1D) CONNECTION				
	LINE 1	LINE 2	LINE 3	JOIN & INSULATE
START (1Y)	T1	T2	T3	(T4,T7) (T5,T8) (T6,T9) (T10,T11,T12)
RUN (1D)	T1,T12	T2,T10	T3,T11	(T4,T7) (T5,T8) (T6,T9)

LOW VOLTAGE

START (2Y) – RUN (2D) CONNECTION				
	LINE 1	LINE 2	LINE 3	JOIN & INSULATE
START (2Y)	T1,T7	T2,T8	T3,T9	(T4,T5,T6) (T10,T11,T12)
RUN (2D)	T1,T6 T7,T12	T2,T4 T8,T10	T3,T5 T9,T11	△

NO.	REVISION	BY & DATE	CHK
A	NEW DRAWING	SAJ 06/26/15	AJAY

TOLERANCES UNLESS SPECIFIED

DEC.	INCHES
.X	±.1
.XX	±.01
.XXX	±.005
.XXXX	±.0005
ANG	±1/2°

REGAL™ Regal Beloit America, Inc.

TITLE: EXT. WIRING DIAGRAM WYE START DELTA RUN

MAT'L. DECAL – 081378

FINISH

RFP

DIST

CAD FILE 00551701

DRAWN	JD 11/10/2011
CHK	AK 11/10/2011
APPD	
SCALE	1=1
REF	005517.01ME
FMF	
PREV	

SIZE A | DRAWING NO. 005517.01 | REV. A

THIS DRAWING IN DESIGN AND DETAIL IS OUR PROPERTY AND MUST NOT BE USED EXCEPT IN CONNECTION WITH OUR WORK ALL RIGHTS OF DESIGN AND INVENTION ARE RESERVED
THIS IS AN ELECTRONICALLY GENERATED DOCUMENT – DO NOT SCALE THIS PRINT

Uncontrolled Copy

P.O. BOX 8003
WAUSAU, WI 54401-8003
PH. 715-675-3311

DATA VOLTS: 460

CERTIFICATION DATA SHEET

CONN. DIAGRAM: 005517.01 **CAT #:** LM34128
OUTLINE: SS86503LN-1545
WINDING: K2154378 R1 6

TYPICAL MOTOR PERFORMANCE DATA

HP	KW	SYNC RPM	FL RPM	FRAME	ENCLOSURE	TYPE	KVA CODE	DESIGN
15	11.2	1800	1765	254T	DP	TDX	J	A

PH	HZ	VOLTS	AMPS	START TYPE	DUTY	INSL	S.F.	AMB	ELEV.
3	60	200/400	44/22.1	VYE START DELTA RUI	CONT	F	1.15	40	3300

F.L. EFF	93.0	3/4 LD EFF	93.0	1/2 LD EFF	92.4	GTD EFF	ELECT. TYPE
F.L. PF	78.5	3/4 LD PF	72.5	1/2 LD PF	60.5	91.7	SQ CAGE IND RUN

F.L. TORQUE	LR AMPS @ 460 V	L.R. TORQUE	B.D. TORQUE	F.L. RISE (°C)
44.5 LB-FT	167	135 LB-FT 303%	142 LB-FT 319%	40

PRESSURE @ 3	POWER	ROTOR WK²	MAX. LOAD WK²	SAFE STALL TIME	STARTS/HOUR	MOTOR WGT
70 dBA	79 dBA	1.70 LB-FT²	90 LB-FT²	20 SEC.	2	185 LB.

*** SUPPLEMENTAL INFORMATION ***

DE BRACKET TYPE	ODE BRACKET TYPE	MOUNT TYPE	MOTOR ORIENTATION	SEVERE DUTY	HAZARDOUS LOCATION	DRIP COVER	SCREENS	PAINT
STANDARD	STANDARD	RIGID	HORIZONTAL	NO	NONE	NO	NONE	GRAY - LINCOLN

BEARINGS DE	BEARINGS ODE	GREASE	SHAFT TYPE	SPECIAL DE	SPECIAL ODE	SHAFT MATERIAL	FRAME MATERIAL
BALL 6309	BALL 6208	POLYREX EM	T	NONE	NONE	1045 HOT ROLLED (C-204)	ROLLED STEEL

THERMOSTATS	PROTECTORS	WDG RTD's	BRG RTD's	THERMISTORS	CONTROL	SPACE HEATERS
NONE	NOT	NONE	NONE	NONE	FALSE	NA

R1 (ohms/ph)	R2 (ohms/ph)	X1 (ohms/ph)	X2 (ohms/ph)	Xm (ohms/ph)	VIBRATION (in/sec)	FLOAT
0.229	0.2	0.829	1.229	18.221	0.150	ODE

* NOTES *

INVERTER TORQUE: NONE
INV. HP SPEED RANGE: NONE

ENCODER: NONE
NONE
NONE NONE **PPR**

BRAKE: NONE
NONE NONE
FT-LB: NA
VOLTAGE: NONE **HZ:**
UL: V-INS, CONST UL REC

DATE: 1/29/2018

Uncontrolled Copy

Data Sheet

Date: 1/29/2018

LM34128

Data @ 400 V

Motor Load Data

Load	0%	25%	50%	75%	100%	115%	125%	LR	
Current (Amps)	10.9	11.7	14.4	18.2	22.4	24.7	26.9	167	
Torque (ft-lb)	0.00	11.0	22.0	33.2	44.5	51.5	56.0	135	
RPM	1800	1791	1785	1777	1765	1,765	1759	0	
Efficiency (%)		88.5	92.4	93.0	93.0	92.4	92.3		
P.F. (%)	5.0	39.0	60.5	72.5	78.5	81.0	81.5	45.0	

Motor Speed Data

	LR	Pull-Up	BD	Rated	Idle
Speed (RPM)	0	900	1525	1765	1800
Current (Amps)	167	150	104	22.4	10.9
Torque (ft-lb)	135	125	142	44.5	0.00

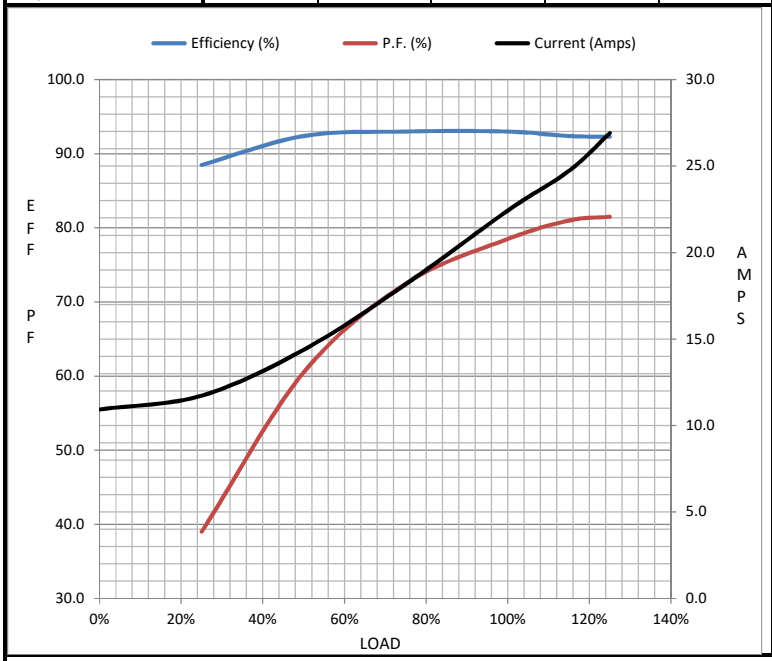

Information Block

HP	15.0	
Sync. RPM	1800	
Frame	256	
Enclosure	DP	
Construction	TDX	
Voltage	200/400	V
Frequency	60	Hz
Design	A	
LR Code letter	J	
Service Factor	1.15	
Temp Rise @ FL	40	° C
Duty	CONT	
Ambient	40	° C
Elevation	1,000	feet
Rotor/Shaft wk²	1.70	Lb-Ft²
Ref Wdg	K2154378 R1	
Sound Pressure @ 1M	70	dBA
VFD Rating	NONE	
Outline Dwg	SS86503LN-1545	
Conn. Diag	005517.01	

Additional Specifications:

0

0

EQUIV CKT (OHMS / PHASE)

R1	R2	X1	X2	Xm
0.2290	0.2000	0.8290	1.2290	18.2210
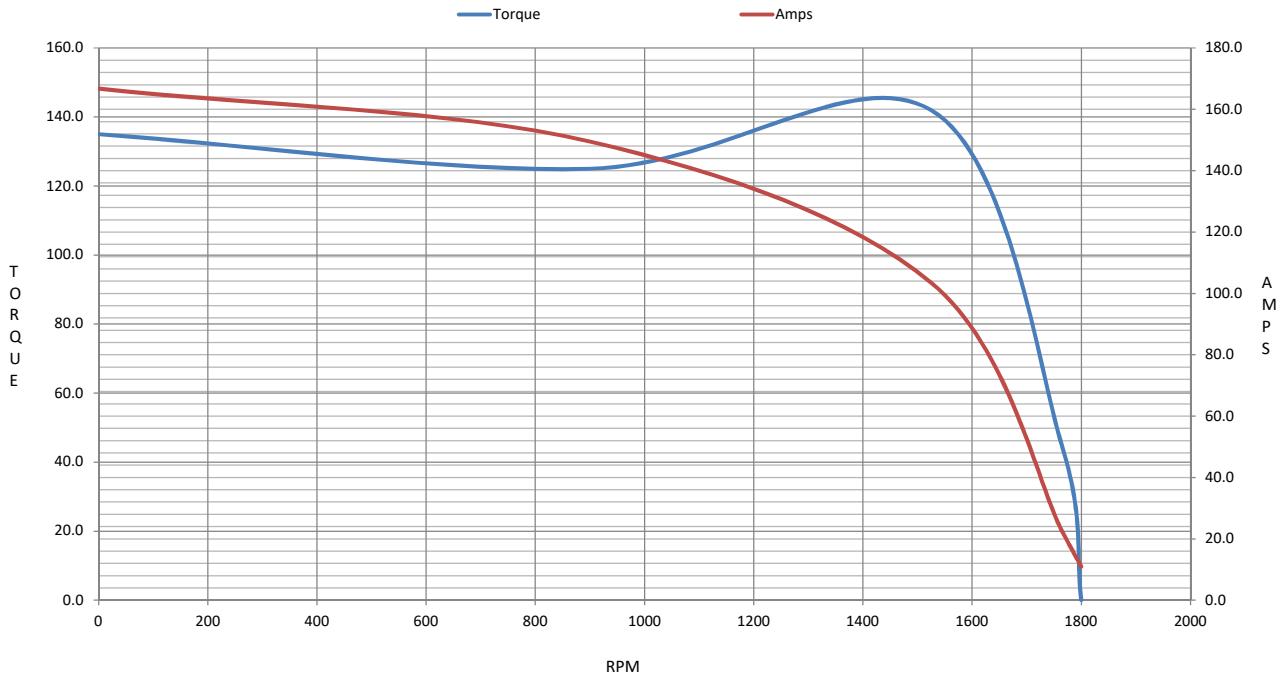
Speed -Torque Curve