PRODUCT INFORMATION PACKET

Model No: LM24243
Catalog No: LM24243
OBSOLETE, REPLACED BY CAST IRON LM33314 - 7.5..900.256T.ODP.230/460.3.60....1.15...SSD8S7.5T61

Regal and are trademarks of Regal Rexnord Corporation or one of its affiliated companies.
©2022 Regal Rexnord Corporation, All Rights Reserved. MC017097E

Nameplate Specifications

Output HP	**7.50 Hp**	Output KW	**5.6 kW**
Frequency	**60 Hz**	Voltage	**230/460 V**
Current	**26.0/13.0 A**	Speed	**860 rpm**
Service Factor	**1.15**	Phase	**3**
Efficiency	**84 %**	Power Factor	**65.7**
Duty	**Continuous**	Insulation Class	**F**
Design Code	**B**	KVA Code	**G**
Frame	**256T**	Enclosure	**Drip Proof**
Thermal Protection	**No Protection**	Ambient Temperature	**40 °C**
Drive End Bearing Size	**309**	Opp Drive End Bearing Size	**208**
UL	**Recognized**	CSA	**Y**
CE	**Y**	IP Code	**12**
Number of Speeds	**1**		

Technical Specifications

Electrical Type	**Squirrel Cage Induction Run**	Starting Method	**Across The Line**
Poles	**8**	Rotation	**Reversible**
Resistance Main	**1.4 Ohms**	Mounting	**Rigid Base**
Motor Orientation	**Horizontal**	Drive End Bearing	**Ball**
Opp Drive End Bearing	**Ball**	Frame Material	**Rolled Steel**
Shaft Type	**T**	Assembly/Box Mounting	**F1/F2 CAPABLE**
Connection Drawing	**A-EE7308-LN**	Outline Drawing	**A-SS86503LN-1545**

This is an uncontrolled document once printed or downloaded and is subject to change without notice. Date Created:07/18/2022

A- SS86503LN

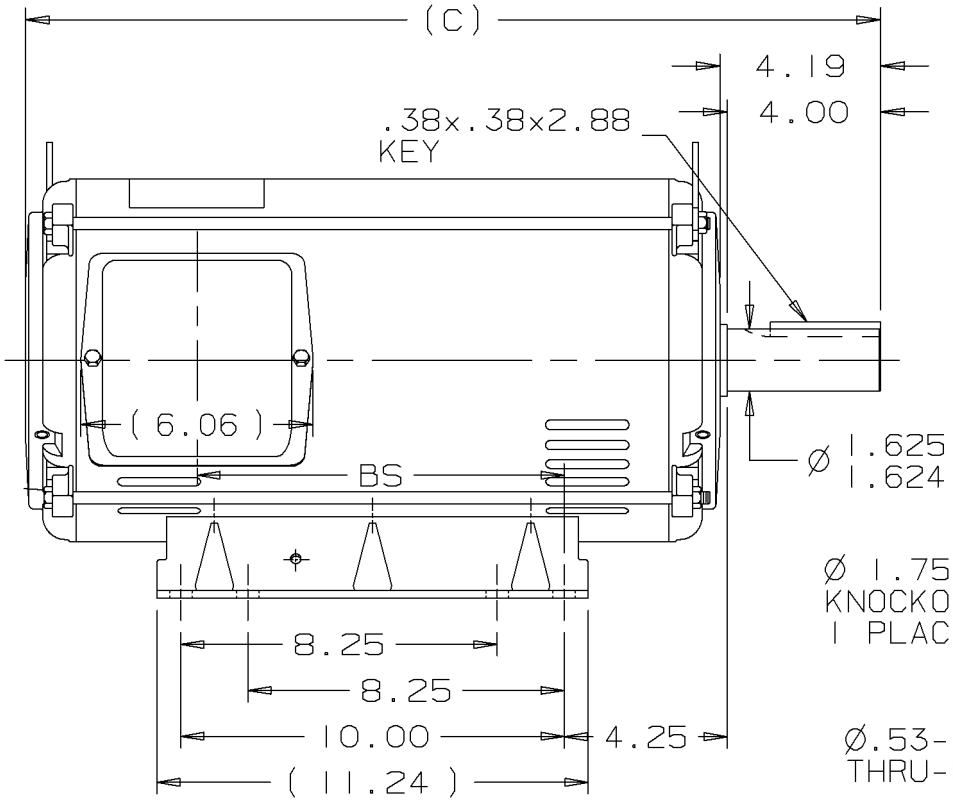

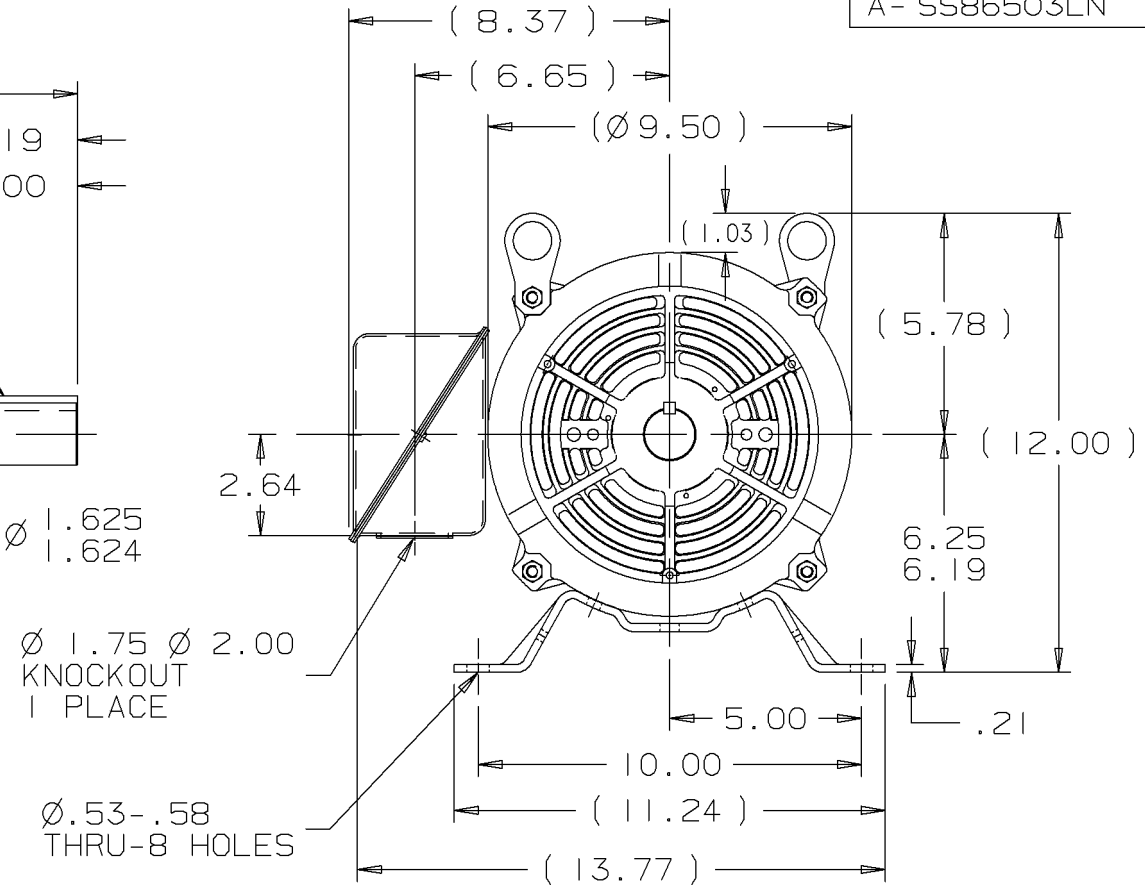

DASH	FR.	C	BS	MOUNTING
1370	254T	20.57	7.68	F1 OR F2
1545	254T/256T	22.32	9.43	F1 OR F2

NOTES:
1. NAMEPLATE TO BE READ FROM C'BOX SIDE OF MOTOR.
2. BOX CAN BE MOUNTED IN 90° STEPS.
3. BOX CAN BE MOUNTED ON OPPOSITE SIDE BY REMOVING BRACKETS AND TURNING FRAME 180°. (EXCEPT AS NOTED.)
4. F2 MOUNT -USES 2ND HOLE ON 1370 FRAME.

REV	DATE	CHANGE	NAME
2	01-31-2000	UPDATED CONDUIT BOX PER CN 28427	TJB
1	07-20-1999	NEW DRAWING	TRB

Lincoln MOTORS

UNLESS OTHERWISE SPECIFIED DIMENSIONS ARE IN INCHES
TOL. ON XX± .02 XXX± .005 XXXX± .0005 ANGLES± 7'30"

MAX. SURFACE ROUGHNESS UNLESS OTHERWISE NOTED
FINISH
MATERIAL

DRAWN BY	TRB	07-20-1999
CHKD BY	ML	07-20-1999
APPD BY	GK	07-20-1999

PART NAME OUTLINE
250 FR. - BB - DR.PR.

DRWG NO A- SS86503LN

L | PURCHASED | CADD FILE NO. | SS86503LN

9/5/2007 5:16:42 AM -

```
ERROR: syntaxerror
OFFENDING COMMAND: --nostringval--

STACK:

/RS
-dictionary-
/Pscript_WinNT_Compat
-dictionary-
```

EE7308-LN

THREE PHASE DUAL VOLTAGE MOTOR

HIGH VOLTAGE

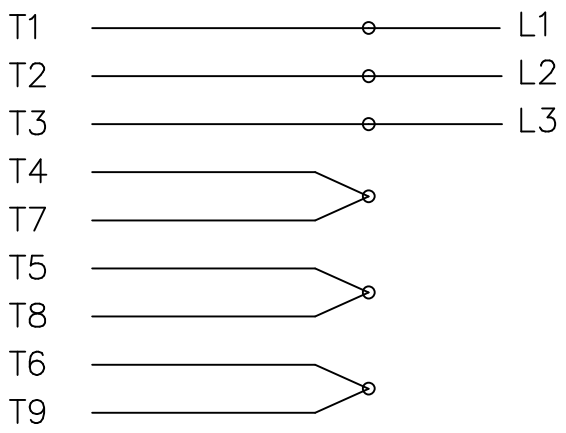

LOW VOLTAGE

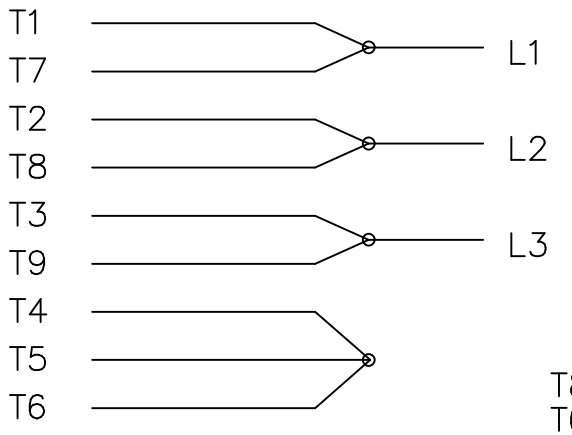

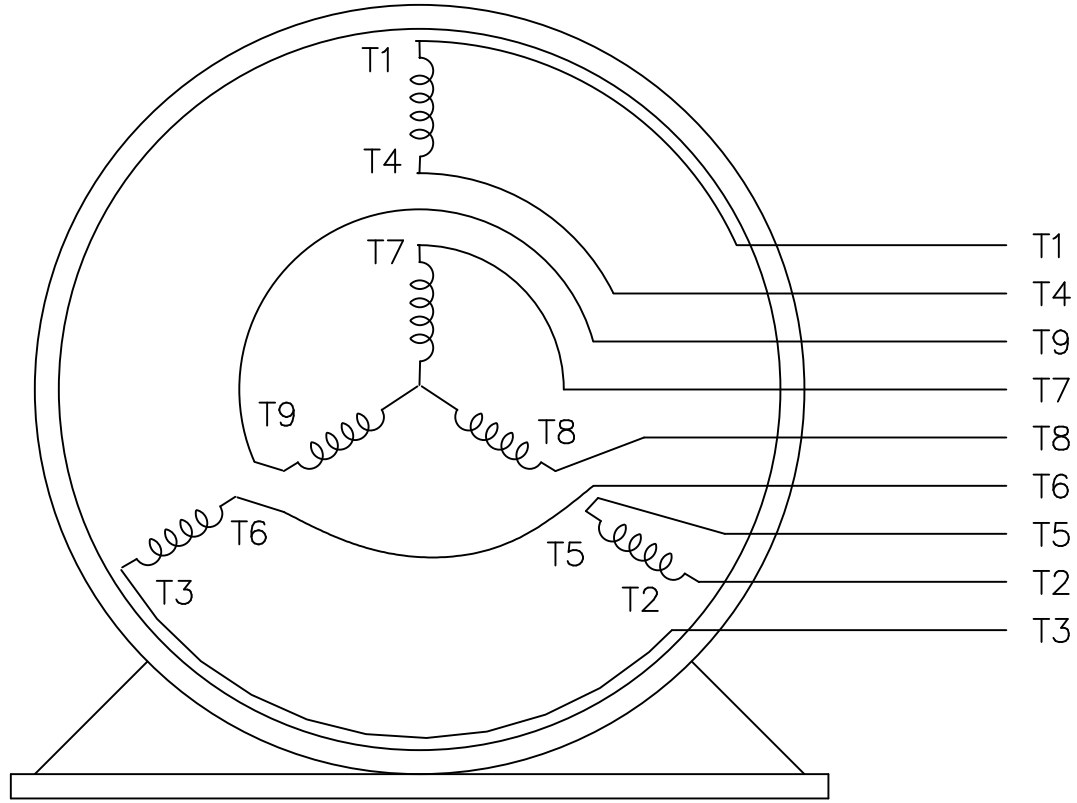

VIEW OF TERMINAL END

REF.
WINDING DIAGRAM

T8Y, T2Y, T2BL, T4BX, T2EC, T2G
T6BZ, T2B, T6BL, T4AV, T6B, T4B

OPTIONAL CORD CONNECTION

L1	WHITE
L2	RED
L3	BLACK

NO.	REVISION	BY & DATE	CHK
3	ADDED THE OPTIONAL CORD CONNECTION MU46318	RDH 04/24/2003	DRS
2	RE-ISSUE, ADDED '-' TO PART NUMBER	BLR 08/09/1999	GK
1	NEW DRAWING	BLR 06/18/1999	GK

TOLERANCES UNLESS SPECIFIED

DEC.	INCHES
.X	±.1
.XX	±.02
.XXX	±.005
.XXXX	±.0005
ANG	±7'30"

Lincoln MOTORS

TITLE CONNECTION DIAGRAM 3ø – DUAL VOLTAGE MOTOR

MAT'L.

FINISH

CAD FILE EE7308LN

RFP

DIST WP

DRAWN	BLR	06/11/1999
CHK	ML	06/18/1999
APPD	GK	06/18/1999
SCALE	1=1	
REF		
FMF		
PREV		

SIZE A | DRAWING NO. EE7308-LN | PAGE OF | REV. 3

THIS DRAWING IN DESIGN AND DETAIL IS OUR PROPERTY AND MUST NOT BE USED EXCEPT IN CONNECTION WITH OUR WORK ALL RIGHTS OF DESIGN AND INVENTION ARE RESERVED
THIS IS AN ELECTRONICALLY GENERATED DOCUMENT – DO NOT SCALE THIS PRINT