PRODUCT INFORMATION PACKET

Model No: E3TI3004167B35D41100
Catalog No: E3TI3004167B35D41100
Made in Italy TCI Series, General Purpose Low Voltage IEC motor, Safe Area, 15,00 kW, 3 phase, 1472 RPM, D400/Y690V 50Hz, 160LA Frame B35, 4 Poles, IC411

Regal and CEMP are trademarks of Regal Rexnord Corporation or one of its affiliated companies.
©2022 Regal Rexnord Corporation, All Rights Reserved. MC017097E

Nameplate Specifications

Output HP	**20 Hp**	Output KW	**15.0 kW**
Frequency	**50 Hz**	Voltage	**400/690 V**
Current	**27.8 A**	Speed	**1472 rpm**
Service Factor	**1**	Phase	**3**
Efficiency	**92.1 %**	Power Factor	**0.85**
Duty	**S1**	Insulation Class	**F**
Frame	**160LA**	Enclosure	**Totally Enclosed Fan Cooled**
Thermal Protection	**No Protection**	Ambient Temperature	**40 °C**
Drive End Bearing Size	**6309**	Opp Drive End Bearing Size	**6209**
UL	**No**	CSA	**No**
CE	**Yes**	IP Code	**IP55**
Number of Speeds	**1**	Efficiency Class	**IE3**

Technical Specifications

Electrical Type	**Squirrel Cage**	Starting Method	**Direct On Line**
Poles	**4**	Rotation	**Bi-Directional**
Mounting	**B35**	Motor Orientation	**Horizontal**
Drive End Bearing	**2z-C3**	Opp Drive End Bearing	**2z-C3**
Frame Material	**Cast Iron**	Shaft Type	**Keyed**
Overall Length	**666.00 mm**	Frame Length	**298.00 mm**
Shaft Diameter	**42.000 mm**	Shaft Extension	**110 mm**
Assembly/Box Mounting	**Top**		
Connection Drawing	**SC-01-T-1v-1a**	Outline Drawing	**B3A04T8160001A01**

This is an uncontrolled document once printed or downloaded and is subject to change without notice. Date Created:12/02/2022

Uncontrolled Copy

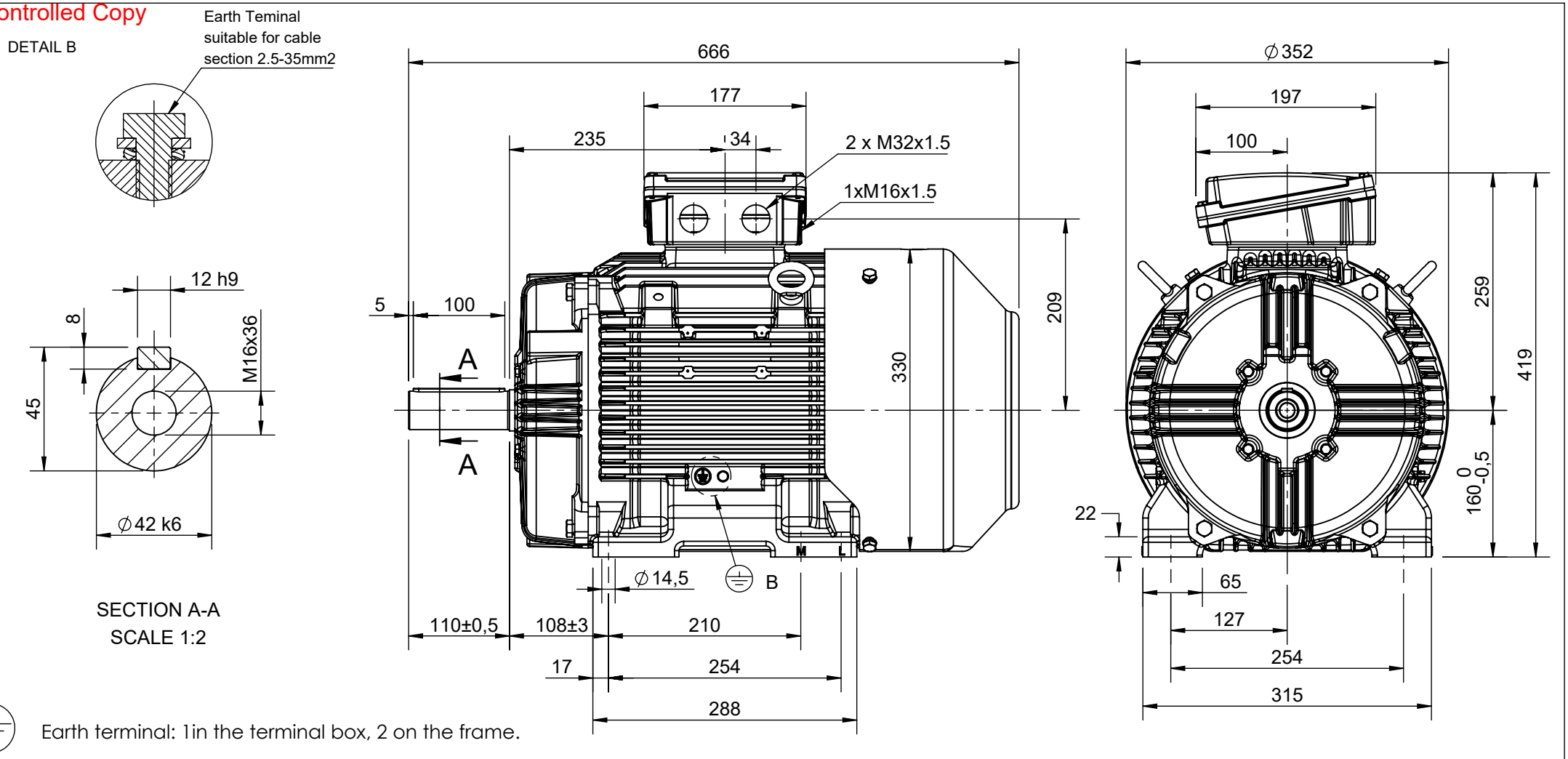

Earth terminal: 1in the terminal box, 2 on the frame.

CUSTOMER REFERENCE AND ADDITIONAL INFORMATION:

MOTOR TYPE AND DESCRIPTION:

DRAWING REVISION	REVISION BY	DATE	TOLERANCES (EXCEPT AS NOTED) TOLERANCES: ±2	DRAWN BY TN	REGAL™ cemp	
ECO	APPROVED BY	DATE	DIMENSIONS ARE IN mm ACCORDING TO IEC 60072	DATE 11/11/2021		
ECO DESCRIPTION				APPROVED BY LP	DESCRIPTION **Motor 160 TC (L) B3**	
				DATE 12/11/2021		
			SERIAL NUMBER	REFERENCE		
				FIRST ANGLE PROJECTION	SIZE A4	DRAWING NUMBER **B3A04T8160001A01**	SHEET 1 OF 2

COPYRIGHT CEMP Srl ALL RIGHTS RESERVED.
PROPRIETARY AND CONFIDENTIAL INFORMATION - THIS DOCUMENT IS THE PROPERTY OF CEMP Srl ("OWNER") AND CONTAINS OWNER'S PROPRIETARY INFORMATION. ANY PERSON, CORPORATION OR OTHER FIRM RECEIVING IT IS DEEMED, BY RECEIVING IT, TO AGREE THAT IT, AND/OR ANY PART OF IT, SHALL NOT BE DISCLOSED TO ANY PERSON, CORPORATION OR OTHER ENTITY, DUPLICATED, AND/OR USED, EXCEPT AS EXPRESSLY APPROVED IN WRITING IN ADVANCE BY OWNER. THIS DOCUMENT SHALL BE RETURNED TO OWNER UPON REQUEST. IT MAY BE SUBJECT TO CERTAIN RESTRICTIONS UNDER APPLICABLE EXPORT CONTROL LAWS AND REGULATIONS.

Uncontrolled Copy

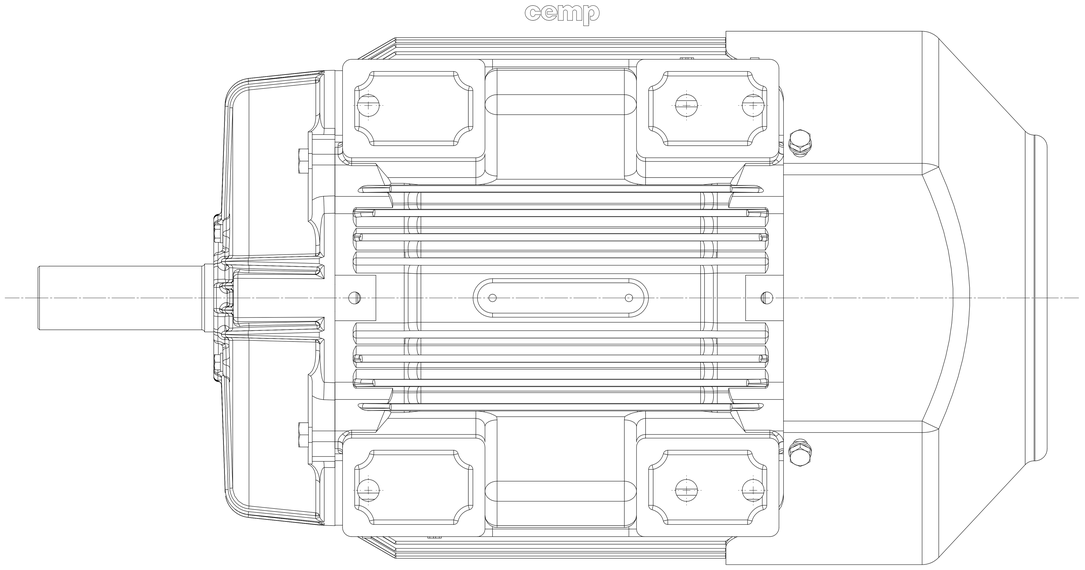

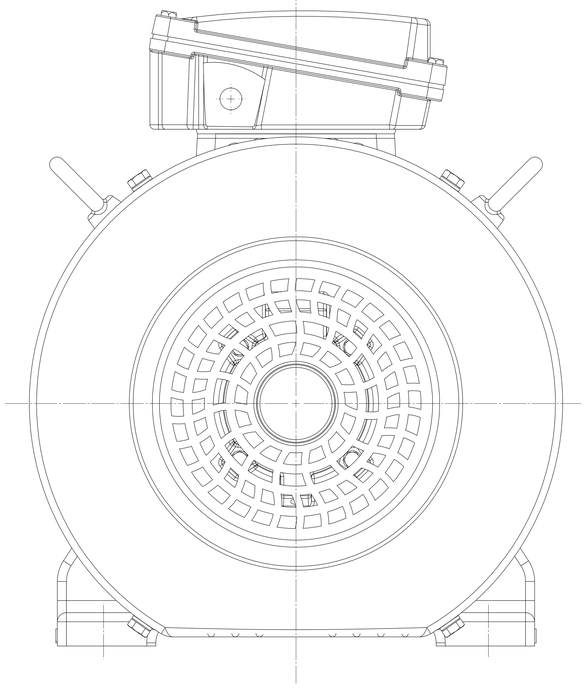

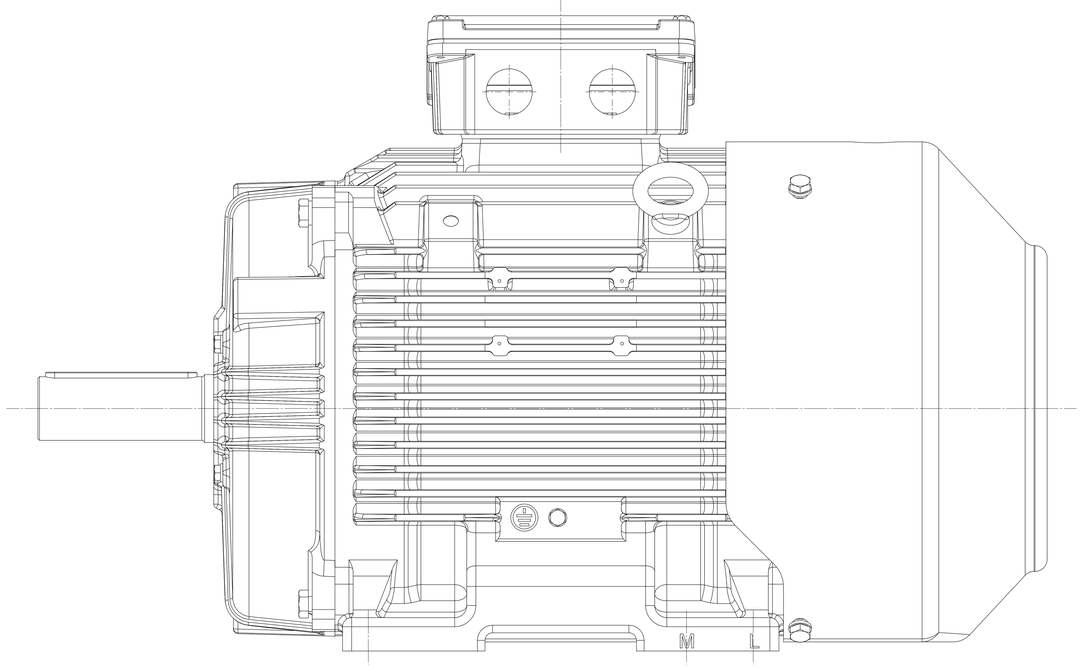

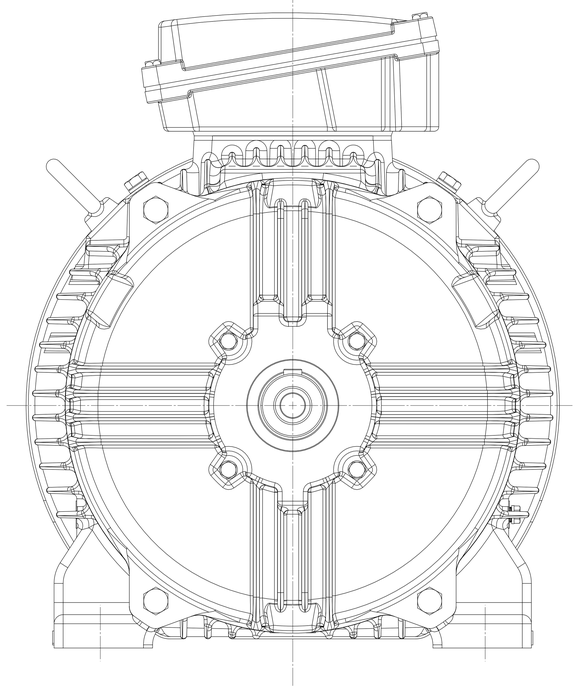

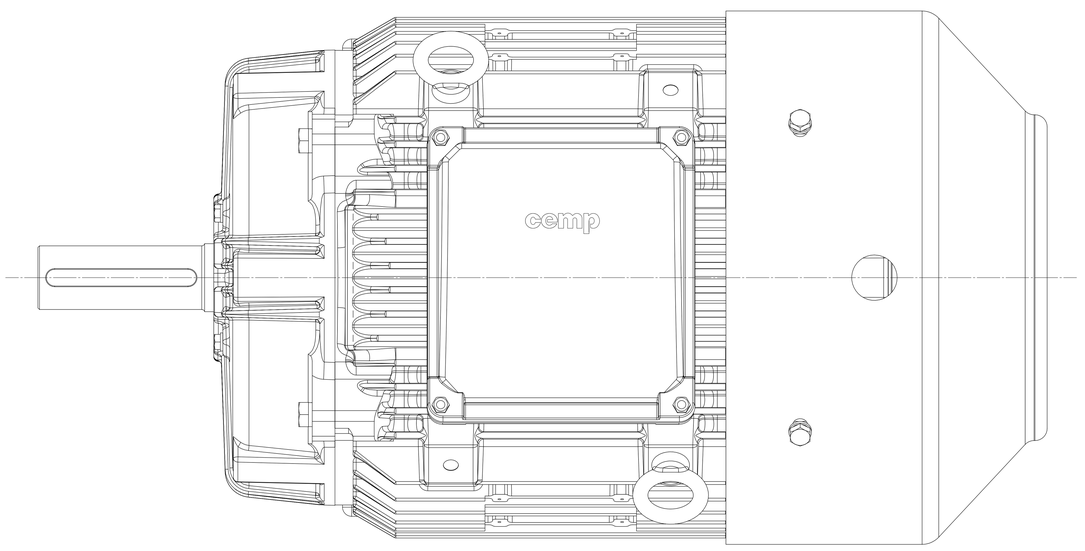

Uncontrolled Copy

Schema di collegamento - *Connection diagram*
Schemas de branchement - *Schaltplän*
Esquemas de conéxiòn

cemp
Flameproof Motors

DTE 01/01/2004
SC - 01 - T - 1v.doc

Motori trifase una velocità - *Single speed, three phase motors* - Moteurs triphasé une vitesse *Drehstrommotor Eine Drehzahlstufe* - Motores trifásico una velocidad

Collegamento - *Connection* - Connexion - *Schaltung* - Conexiòn

Δ

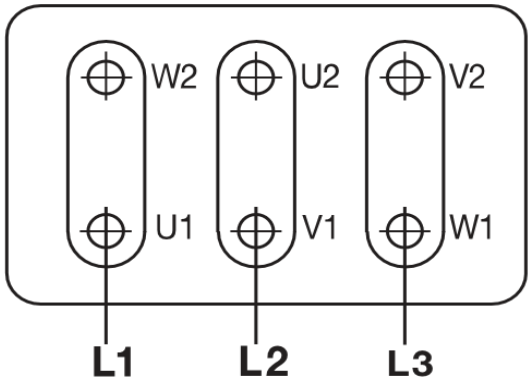

Collegamento - *Connection* - Connexion - *Schaltung* - Conexiòn

Y

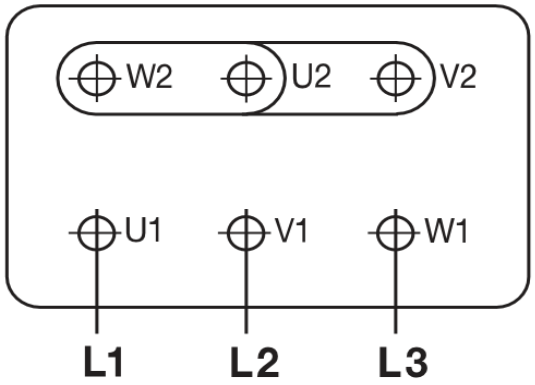

L1 - L2 - L3 = Linea - *Supply* - Reseau - *Netz* - Red

Per invertire la rotazione invertire due fasi - *To change the rotation reverse two phases* - Pour changer le sens de rotation inverser deux phases - *Zur Drehrichtungsänderung zwei Phasen vertauschen* - Para invertir el sentido de rotación invertir dos fases

Uncontrolled Copy

Marcatura Morsetti Ausiliari - *Additional terminals marking* (IEC60034-8)

Marcatura *Marking*	No. morsetti *terminals*	Morsetto ausiliare per: *Additional terminal for:*
TP1A - TP2A (allarme- *warning)*	2	Termistori PTC (alta velocità) - *Thermistor PTC (high speed)* [*]
TP1B - TP2B (allarme- *warning)*	2	Termistori PTC (bassa velocità) - *Thermistor PTC (low speed)* [*]
R1 - R2 - R3 (I sensore - *sensor)*	3	Termistore PT100 3 fili - *Thermistor PT 100 with 3 wires*
R4 - R5 - R6 (II sensore - *sensor)*	3	
R7 - R8 - R9 (III sensore - *sensor)*	3	
R11 - R12 - R13 (anteriore - *DE*)	3	Termistore PT100 su cuscinetto - *Thermistor PT 100 on bearing*
R21 - R22 - R23 (posteriore - *NDE*)	3	
TB1 - TB2 (allarme- *warning)*	2	Protettore bimetallico normalmente chiuso - *Normally closed bi-metallic switch* (**)
TB3 - TB4 (intervento- *switch off)*	2	
TB8 - TB9 (intervento- *switch off)*	2	Protettore bimetallico del freno normalmente chiuso - *NC brake bi-metallic switch* (**)
TM1 - TM2 (allarme- *warning)*	2	Protettore bimetallico normalmente aperto - *Normally open bi-metallic switch* (**)
TM3 - TM4 (intervento- *switch off)*	2	
HE1- HE2	2	Resistenze riscaldanti - *Space heaters*
U1 - U2	2	Ventilazione ausiliaria monofase - *Single phase forced ventilation*
U - V - W	2	Ventilazione ausiliaria trifase - *Three phase forced ventilation*
colori secondo schema del produttore - *colours according manufacturer*	9	Encoder
CA1 - CA2	2	Condensatore - *Capacitor*
PE	1	Conduttore di terra - *Earth cable*

[*] U nominale - *U rated* = 6V - max 30V

(**) U nominale - *U rated* = 250V

FOGLIO DATI PER MOTORI ELETTRICI ASINCRONI TRIFASI : SERIE IEC

DATA SHEET FOR ASYNCHRONOUS THREEPHASE INDUCTION MOTORS: IEC SERIES

Cliente / Customer -	Conferma ordine / Acknowledgment : N° -
Ordine cliente / Customer order : -	Impianto / Plant -
Item : -	

DATI DI PROGETTO - DESIGN DATA

Modo di protezione		Motore / Frame		IP55
Type of protection		Scatola morsetti / Terminal box		IP55

Tem. Amb. Min. / Min Amb.Temp.	-20 °C	Tem. Amb. Max. / Max Amb. Temp.	40 °C
Umidità relativa / Relative humidity	90%	Altitudine / Altitude	< 1000 mslm / masl
Tensione nominale / Rated Voltage	400 V +/- 10%	Frequenza / Frequency	50 Hz +/- 3%

DATI FUNZIONALI E COSTRUTTIVI - PERFORMANCE AND CONSTRUCTION DATA

1	Quantità / Quantity		01
2	Motore tipo / Motor type		TCI 160LA4
3	Numero di serie / Serial Number		
4	Forma costruttiva / Shape		B35
5			
6			
	Dati nominali / Rated data		
7	Poli / Pole	n°	4
8	Potenza nominale / Rated power	kW	15,00
9	Corrente nominale / Rated current	A	27,75
10	Velocità nominale / Full Load speed	1/min	1472
11	Collegamento / Winding connection		D
12	Isolamento / Insulation class		F
13	Sovratemperatura / Temperature rise		DT80K
14	Raffreddamento / Cooling type		IC411
15	Fattore di servizio / Service factor		1
16			
17	Classe di rendimento / Efficiency level	IEC 34-30	IE3

Performances elettriche / Electrical performances

	Carico / Load		4/4	3/4	2/4
18	Giri / Speed	1/min	1472	1483	1489
19	Corr. / Curr.	A	27,75	21,66	14,52
20	Rend / Eff	%	92,1	92,7	92,2
21	cos φ	-	0,85	0,81	0,81

	Performances all'avviamento / Starting performances		
22	Ia/In - LRC/FLC	%	755
23	Cosphi a rotore bloccato / LR power factor		0,48
	Tempo a rotore bloccato / LRWT		
24	100% Un (A caldo / Warm)	sec	8
25	(A freddo / Cold)	sec	21
26	80% Un (A caldo / Warm)	sec	13
27	(A freddo / Cold)	sec	33
	Tempo di avviamento ammissibile / ART		
28	100% Un	sec	19
29	80% Un	sec	29
	Curva di coppia / Speed-torque values		
30	Coppia nominale / Rated Torque	Nm	97,32
31	Ca/Cn - LRT/FLT	%	255
32	Cmax/Cn - BDT/FLT	%	320
33			
34			
35			
	Varie / Other		
36			
37			
38			
39			

	Servizio / Duty		
40	Servizio / Duty type	-	S1
41	Intermittenza / Cyclic duration factor	-	-
42	Avviamenti-ora / Starting-hour	-	-
43	Tempo ciclo / Time		-
	Cuscinetti / Bearings		
44	Cuscinetto ant / DE bearing	-	6309 ZZ C3
45	Cuscinetto post / NDE bearing	-	6209 ZZ C3
46	Carico radiale max / Max radial load in X1	N	2377
47	Carico assiale max / Max axial load	N	1721
48	Tipo grasso / Grease type		LGHP2 SKF or equivalent
49	Intervallo lubrificazione / Lubrication	h	-
50	Quantità grasso / Quantity grease	gr	-
	Caratteristiche meccaniche / mechanical specification		
51	Massa / Mass	kg	170
52	Momento d'inerzia / Moment of inertia	kgm2	0,1603
53	Rumore a vuoto / Noise at no load (1 m)	Lp dB(A)	66
54	Vibrazioni / Vibration level	IEC 34-14	A
55	Limite norma / Vibration limit	mm/sec	2,20
56			
57			
58			
59			
60			
61			
62			
	Dati entrata cavi - verniciatura / Cable entry and painting		
63	Entrata cavi / Cable entry	IEC 60423	2xM32+1xM16
64	Ciclo verniciatura / Painting cycle		STD
65	Colore finale / Final colour	RAL	5010
66			
67			
68			
69			
70			
71			
	Ausiliari - Auxiliaries		
72	Sonde termiche / Temperature detector	winding	PTC
73	Sonde termiche / Temperature detector	bearing	-
74	Scaldiglie / Heaters	V / W	-
75	Preparation for SPM sensor		-
76	Pressacavi / Cable glands		NO
77			

Documento preliminare - Preliminary data sheet

Prepared by : GC Tolleranze secondo - Tolerances according IEC 60034-1 Rev. 0 Data / Date 03 October 2022

CURVA COPPIA/CORRENTE-GIRI
TORQUE/CURRENT-SPEED DIAGRAM

Cliente / Customer	-
Ordine cliente / Customer order	-
Impianto / Plant	-
ITEM	**-**
Conferma ordine / Acknowledgment	-
Numero di serie / Serial Number	

Motore / Motor	**TCI 160LA4**	
Potenza nominale / Rated power	15,00	kW
Poli / Pole	4	
Tensione - Frequenza / Voltage - Frequency	400 - 50	V - Hz
Corrente / Rated current	27,75	A
Velocità / Speed	1472	rpm
Coppia / Torque	97,32	Nm

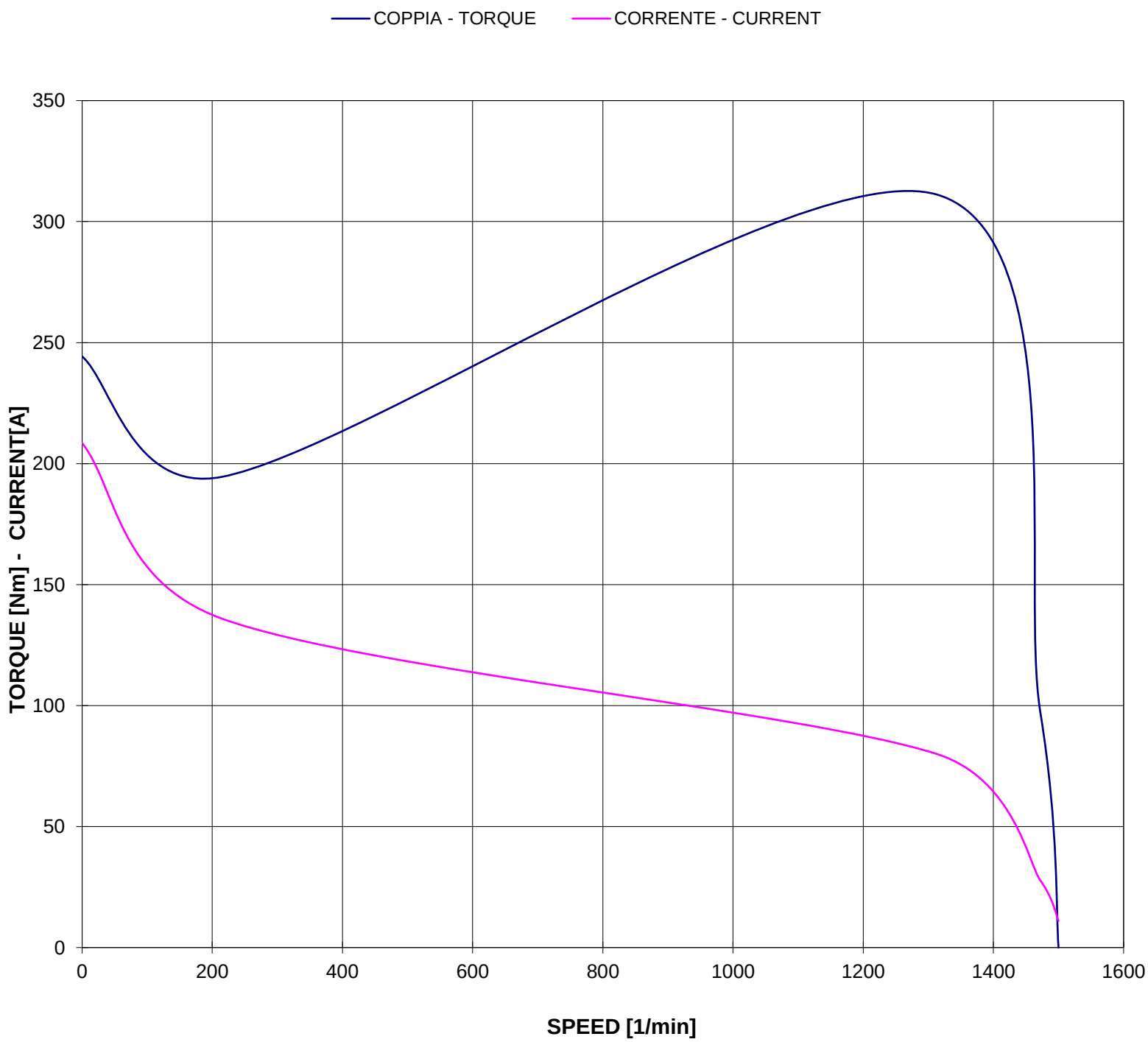

Valori calcolati - Data obtained by calculation method
Documento preliminare - Preliminary document

Data / Date 24-feb-22

CURVA COPPIA/CORRENTE-GIRI (Tensione ridotta)
TORQUE/CURRENT-SPEED DIAGRAM (Reduced voltage)

Cliente / Customer	-
Ordine cliente / Customer order	-
Impianto / Plant	-
ITEM	**-**
Conferma ordine / Acknowledgment	-
Numero di serie / Serial Number	

Motore / Motor	**TCI 160LA4**	
Potenza nominale / Rated power	15,00	kW
Poli / Pole	4	
Tensione - Frequenza / Voltage - Frequency	400 - 50	V - Hz
Corrente / Rated current	27,75	A
Velocità / Speed	1472	rpm
Coppia / Torque	97,32	Nm

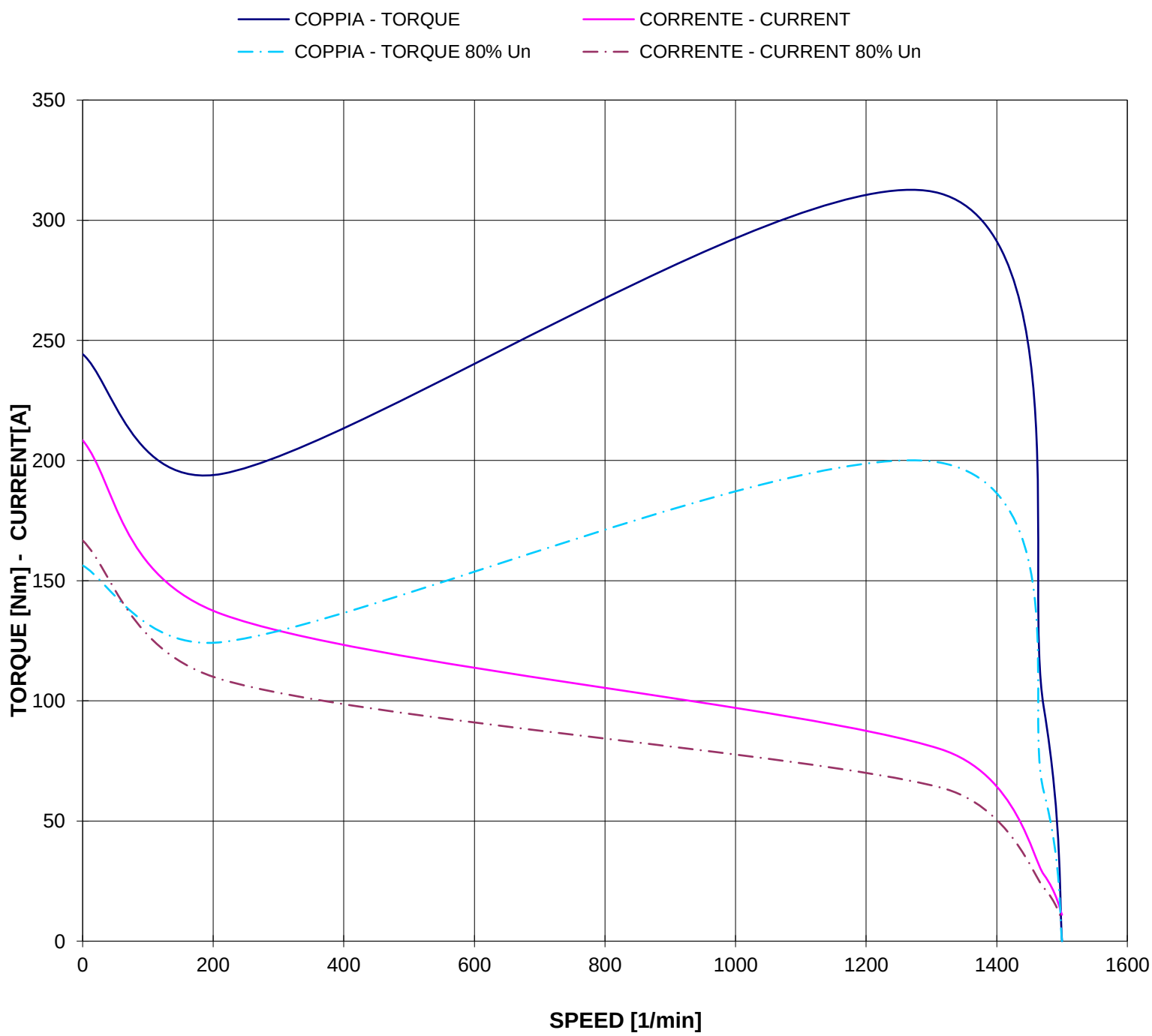

Valori calcolati - Data obtained by calculation method
Documento preliminare - Preliminary document

Data / Date 24-feb-22

CURVE CARATTERISTICHE
PERFORMANCE CURVES

Cliente / Customer	-
Ordine cliente / Customer order	-
Impianto / Plant	-
ITEM	**-**
Conferma ordine / Acknowledgment	-
Numero di serie / Serial Number	

Motore / Motor	**TCI 160LA4**	
Potenza nominale / Rated power	15,00	kW
Poli / Pole	4	
Tensione - Frequenza / Voltage - Frequency	400 - 50	V - Hz
Corrente / Rated current	27,75	A
Velocità / Speed	1472	rpm
Coppia / Torque	97,32	Nm

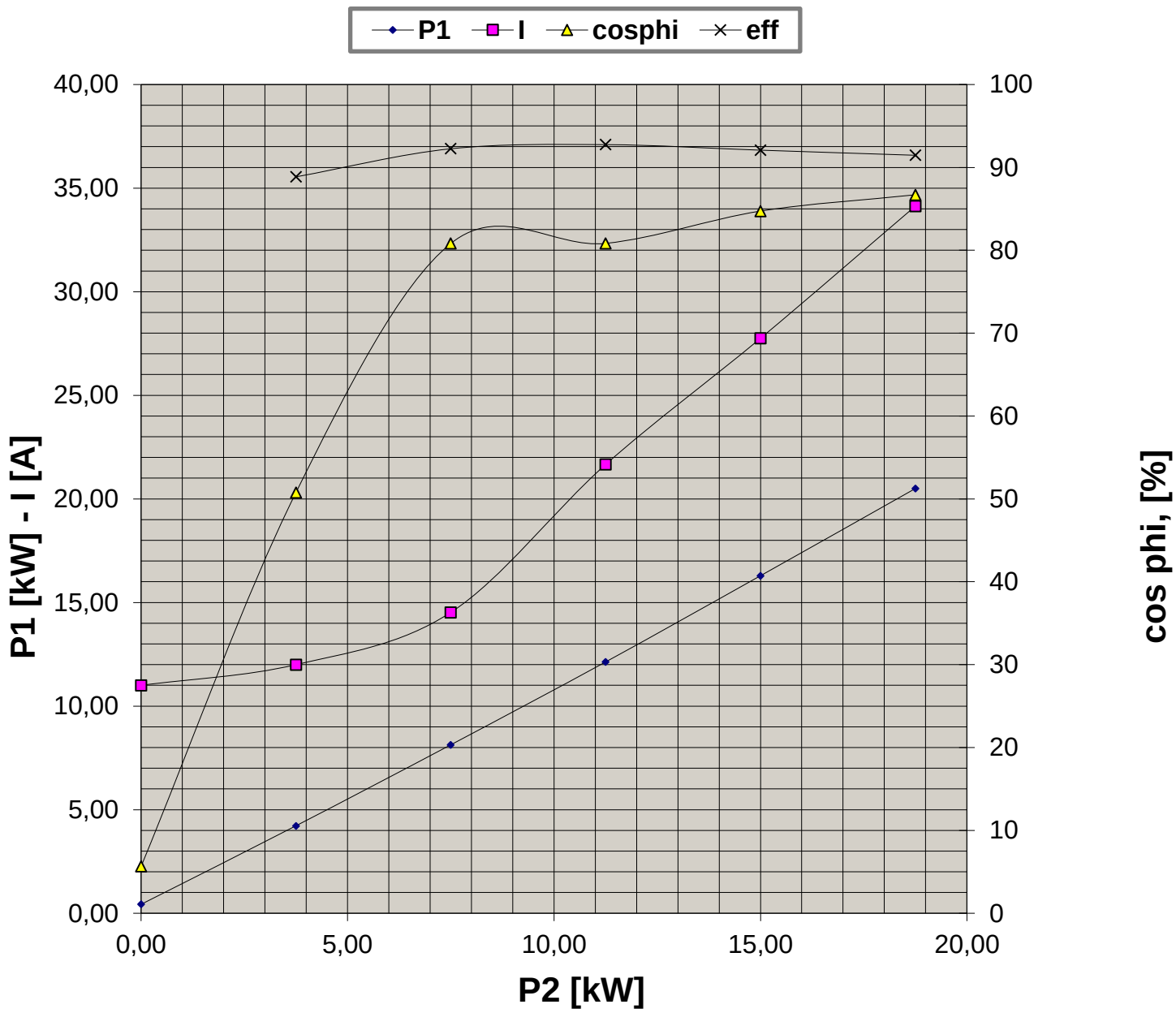

Valori calcolati - Data obtained by calculation method
Documento preliminare - Preliminary document

Data / Date 24-feb-22

CURVA LIMITE CORRENTE TEMPO
THERMAL WITHSTAND CURVE

Cliente / Customer	-	
Ordine cliente / Customer order	-	
Impianto / Plant	-	
ITEM	**-**	
Conferma ordine / Acknowledgment	-	
Numero di serie / Serial Number		
Motore / Motor	**TCI 160LA4**	
Potenza nominale / Rated power	15,00	kW
Poli / Pole	4	
Tensione - Frequenza / Voltage - Frequency	400 - 50	V - Hz
Corrente / Rated current	27,75	A
Velocità / Speed	1472	rpm
Coppia / Torque	97,32	Nm

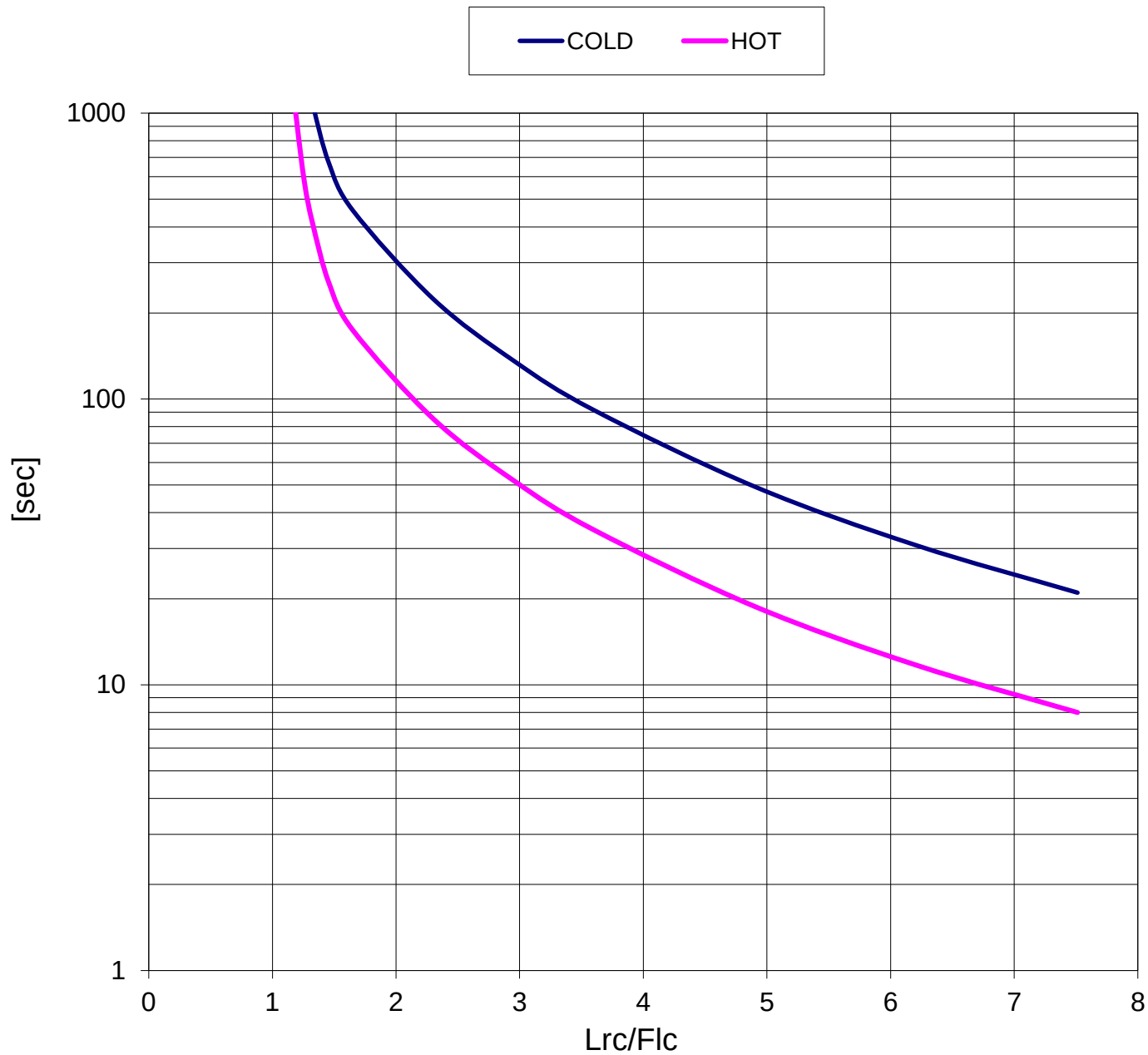

Valori calcolati - Data obtained by calculation method
Documento preliminare - Preliminary document

Data / Date 24-feb-22

CURVA LIMITE CORRENTE TEMPO (Tensione ridotta)
THERMAL WITHSTAND CURVE (Reduced voltage)

Cliente / Customer	-
Ordine cliente / Customer order	-
Impianto / Plant	-
ITEM	**-**
Conferma ordine / Acknowledgment	-
Numero di serie / Serial Number	

Motore / Motor	**TCI 160LA4**	
Potenza nominale / Rated power	15,00	kW
Poli / Pole	4	
Tensione - Frequenza / Voltage - Frequency	400 - 50	V - Hz
Corrente / Rated current	27,75	A
Velocità / Speed	1472	rpm
Coppia / Torque	97,32	Nm

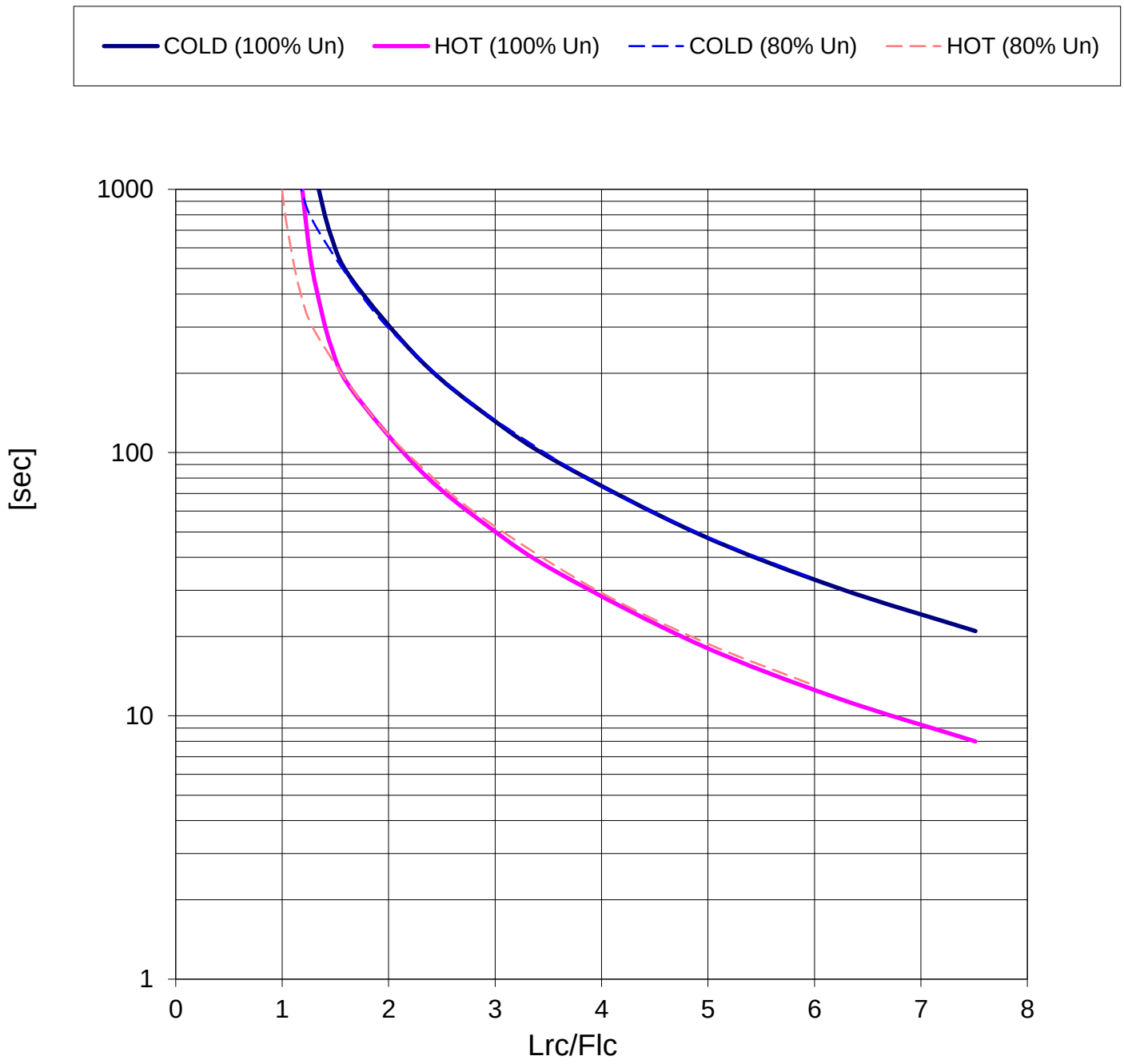

Valori calcolati - Data obtained by calculation method
Documento preliminare - Preliminary document

Data / Date 24-feb-22