PRODUCT INFORMATION PACKET

Model No: B199980.00
Catalog No: B199980.00
Close-Coupled Pump Motor, 25 & 20 HP, 3 Ph, 60 & 50 Hz, 230/460 & 190/380 V, 1800 & 1500 RPM, 284JM Frame, TEFC

Regal and Leeson are trademarks of Regal Rexnord Corporation or one of its affiliated companies.
Â©2023 Regal Rexnord Corporation, All Rights Reserved. MC017097E

Nameplate Specifications

Phase	3	Output HP	25 & 20 Hp
Output KW	18.7 & 14.9 kW	Voltage	230/460 & 190/380 V
Speed	1775 & 1476 rpm	Service Factor	1.15 & 1.15
Frame	284JM	Enclosure	Totally Enclosed Fan Cooled
Thermal Protection	No Protection	Efficiency	93.6 & 93 %
Ambient Temperature	40 °C	Frequency	60 & 50 Hz
Current	61/30.5 & 60/30 A	Power Factor	83
Duty	Continuous	Insulation Class	F
Design Code	B	KVA Code	G
Drive End Bearing Size	6311	Opp Drive End Bearing Size	6211
UL	Listed	CSA	Y
CE	Y	IP Code	55
Number of Speeds	1		

Technical Specifications

Electrical Type	Squirrel Cage Inverter Rated	Starting Method	Wye Start Delta Run Or Inverter
Poles	4	Rotation	Reversible
Resistance Main	.2988 Ohms	Mounting	Rigid Base
Motor Orientation	Horizontal	Drive End Bearing	Ball
Opp Drive End Bearing	Ball	Frame Material	Cast Iron
Shaft Type	JM	Overall Length	27.52 in
Frame Length	11.41 in	Shaft Diameter	1.375 in
Shaft Extension	5.5 in	Assembly/Box Mounting	F1/F2 CAPABLE
Outline Drawing	SS620797-284JM	Connection Drawing	EE7308AA

This is an uncontrolled document once printed or downloaded and is subject to change without notice. Date Created:06/22/2023

DASH NO.	B	C	E	2E	2F	2FF	AG	AH	BV	EQ	ET	MOUNTING	FRAME
100	10.83	27.52	5.50	11.00	---	9.50	22.27	5.25	9.76	0.62	2.99	F1 OR F2	284JM
200	12.68	29.02			9.50	11.00	23.77		10.50				284/286JM

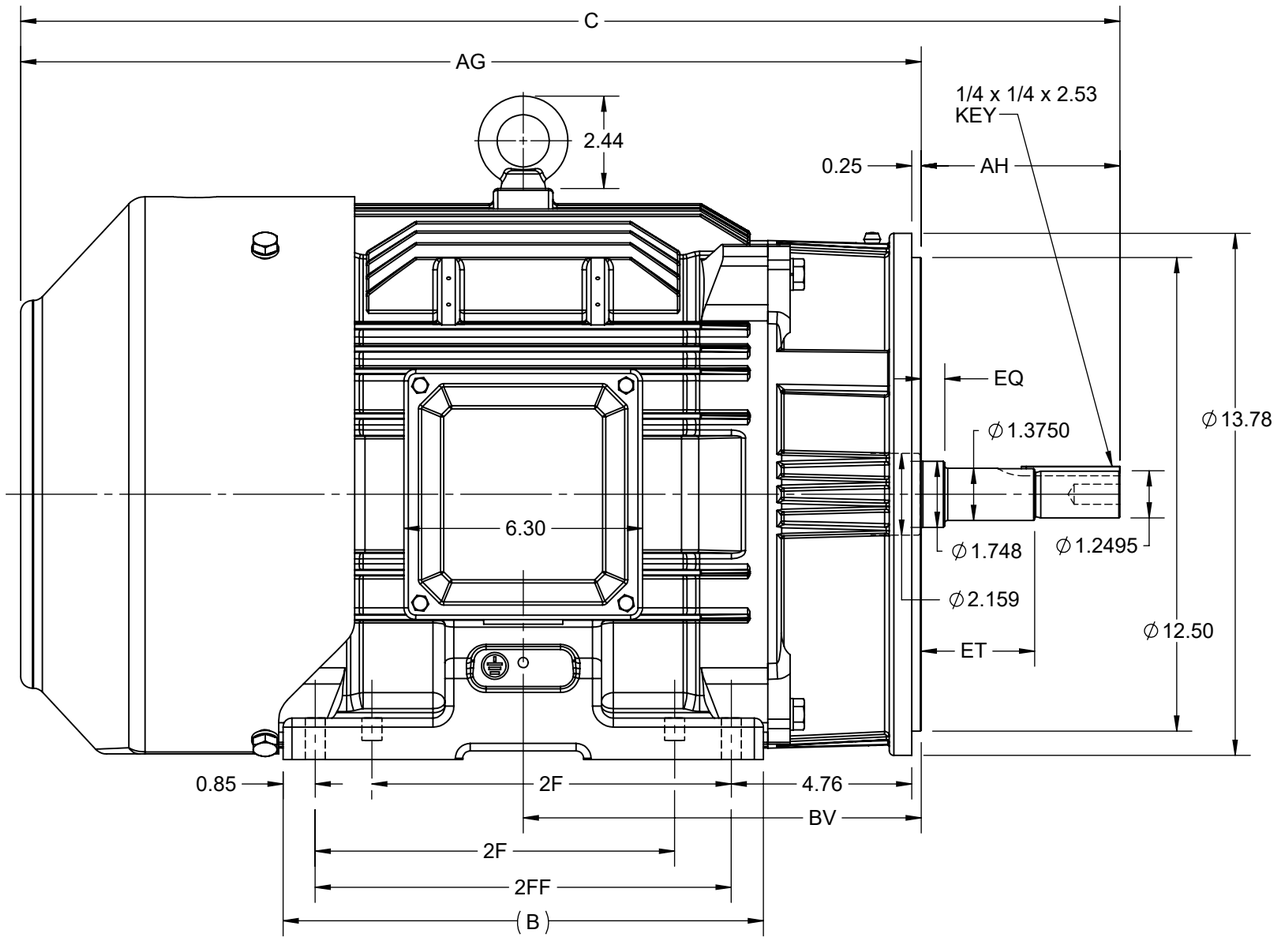

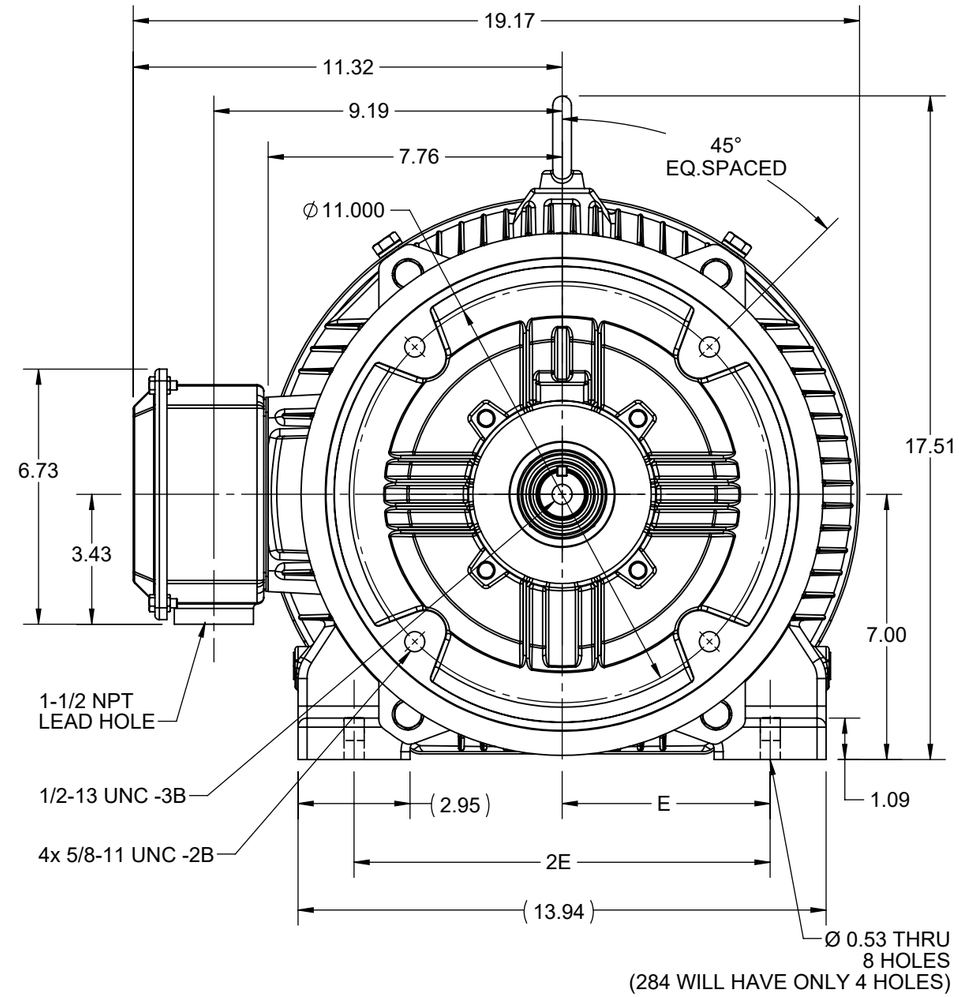

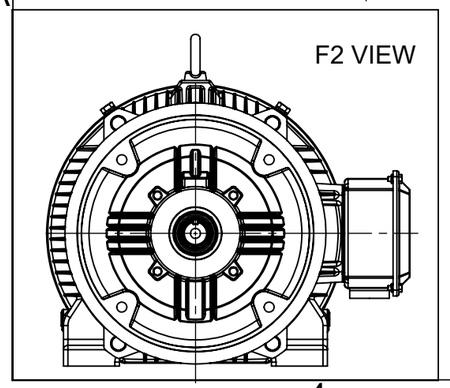

DRAWING REVISION	REVISION BY	REV DATE/© DATE
D	VS	20-01-2021
ECO	APPROVED BY	DATE
CR-0000688	GNK	20-01-2021

ECO DESCRIPTION
DRAWING UPDATED

COPYRIGHT (PER REVISION DATE) REGAL BELOIT AMERICA, INC. ALL RIGHTS RESERVED. PROPRIETARY AND CONFIDENTIAL INFORMATION - THIS DOCUMENT IS THE PROPERTY OF REGAL BELOIT AMERICA, INC. ("OWNER") AND CONTAINS OWNER'S PROPRIETARY INFORMATION. ANY PERSON, CORPORATION OR OTHER FIRM RECEIVING IT IS DEEMED, BY RECEIVING IT, TO AGREE THAT IT, AND/OR ANY PART OF IT, SHALL NOT BE DISCLOSED TO ANY PERSON, CORPORATION OR OTHER ENTITY, DUPLICATED, AND/OR USED, EXCEPT AS EXPRESSLY APPROVED IN WRITING IN ADVANCE BY OWNER. THIS DOCUMENT SHALL BE RETURNED TO OWNER UPON REQUEST. IT MAY BE SUBJECT TO CERTAIN RESTRICTIONS UNDER APPLICABLE EXPORT CONTROL LAWS AND REGULATIONS.

PRIMARY DIMENSIONS ARE INCH
mm DIMENSIONS IN [BRACKETS]
ARE FOR REFERENCE ONLY

DRAWN BY	SN
DATE	12/04/2017
APPROVED BY	SBD
DATE	12/04/2017
REFERENCE	
THIRD ANGLE PROJECTION	

Regal Beloit America, Inc.

DESCRIPTION
OUTLINE
284/286 JM FR NEMA TEFC-CAST IRON

MATERIAL	PROCESS/FINISH

SIZE	DRAWING NUMBER	SHEET
B	SS620797	1 OF 1

Uncontrolled Copy

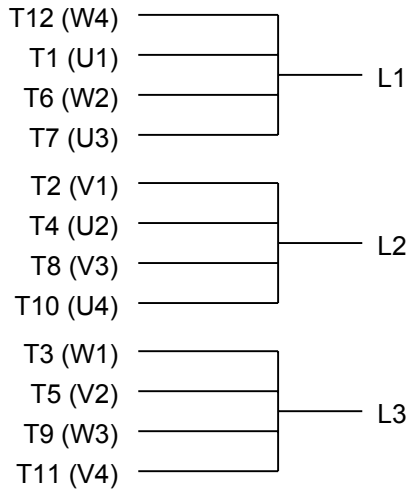

LOW VOLTAGE

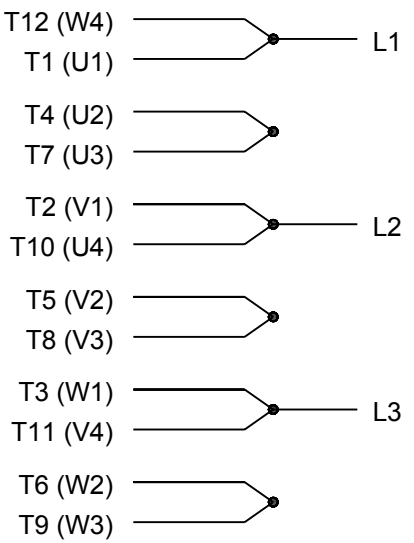

HIGH VOLTAGE

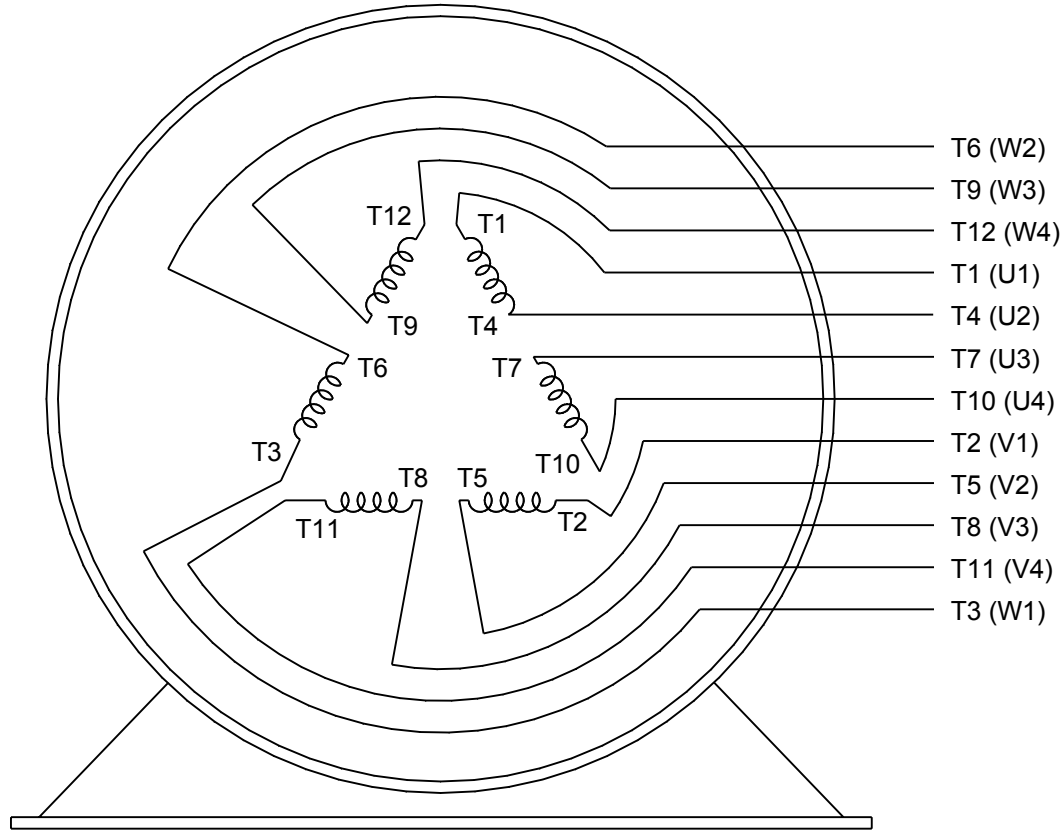

VIEW OF TERMINAL END

DRAWING REVISION K	REVISION BY AJW	DATE 07-17-2015		DRAWN BY LZ	Regal Beloit America, Inc.
ECO ECO-0081632	APPROVED BY T. VUE	DATE 07-17-2015		DATE 01-12-1994	
ECO DESCRIPTION REV'D IEC MARKINGS PER IEC 60034-8				APPROVED BY GK	DESCRIPTION CONN DIAGRAM-EXTERNAL 3Ø-2/1 DELTA-12 LEADS
				DATE 01-14-1994	
				REFERENCE	MATERIAL / PROCESS/FINISH
				THIRD ANGLE PROJECTION	SIZE A / DRAWING NUMBER EE7308AA / SHEET 1 OF 1

COPYRIGHT REGAL BELOIT AMERICA, INC. ALL RIGHTS RESERVED.
PROPRIETARY AND CONFIDENTIAL INFORMATION - THIS DOCUMENT IS THE PROPERTY OF REGAL BELOIT AMERICA, INC. ("OWNER") AND CONTAINS OWNER'S PROPRIETARY INFORMATION. ANY PERSON, CORPORATION OR OTHER FIRM RECEIVING IT IS DEEMED, BY RECEIVING IT, TO AGREE THAT IT, AND/OR ANY PART OF IT, SHALL NOT BE DISCLOSED TO ANY PERSON, CORPORATION OR OTHER ENTITY, DUPLICATED, AND/OR USED, EXCEPT AS EXPRESSLY APPROVED IN WRITING IN ADVANCE BY OWNER. THIS DOCUMENT SHALL BE RETURNED TO OWNER UPON REQUEST. IT MAY BE SUBJECT TO CERTAIN RESTRICTIONS UNDER APPLICABLE EXPORT CONTROL LAWS AND REGULATIONS.