PRODUCT INFORMATION PACKET

Model No: 280MTFC6588
Catalog No: R505
Globetrotter® IEC Cast Iron Motor, 75 & 60 HP, 3 Ph, 60 & 50 Hz, 230/460 & 200/400 V, 1200 & 1000 RPM, 280M Frame, TEFC

Regal and Marathon are trademarks of Regal Rexnord Corporation or one of its affiliated companies.
Â©2023 Regal Rexnord Corporation, All Rights Reserved. MC017097E

Nameplate Specifications

Phase	3	Output HP	75 & 60 Hp
Output KW	56.0 & 45.0 kW	Voltage	230/460 & 200/400 V
Speed	1194 & 994 rpm	Service Factor	1.15 & 1.15
Frame	280M	Enclosure	Totally Enclosed Fan Cooled
Thermal Protection	No Protection	Efficiency	94.5 & 94.5 %
Ambient Temperature	40 °C	Frequency	60 & 50 Hz
Current	190/95 & 182/91 A	Power Factor	78
Duty	Continuous	Insulation Class	F
Design Code	B	KVA Code	H
Drive End Bearing Size	6317	Opp Drive End Bearing Size	6314
UL	Recognized	CSA	Y
CE	Y	IP Code	55
Number of Speeds	1		

Technical Specifications

Electrical Type	Squirrel Cage Inverter Rated	Starting Method	Part Wdg Start & Wye Start Delta Run Or Inverter
Poles	6	Rotation	Reversible
Mounting	Rigid Base	Motor Orientation	Horizontal
Drive End Bearing	Ball	Opp Drive End Bearing	Ball
Frame Material	Cast Iron	Shaft Type	IEC
Overall Length	40.39 in	Shaft Diameter	3.000 in
Shaft Extension	5.51 in	Assembly/Box Mounting	F3
Inverter Load	CONSTANT 2:1		
Connection Drawing	00417203ME	Outline Drawing	SS622382

This is an uncontrolled document once printed or downloaded and is subject to change without notice. Date Created:06/21/2023

Uncontrolled Copy

SS622382

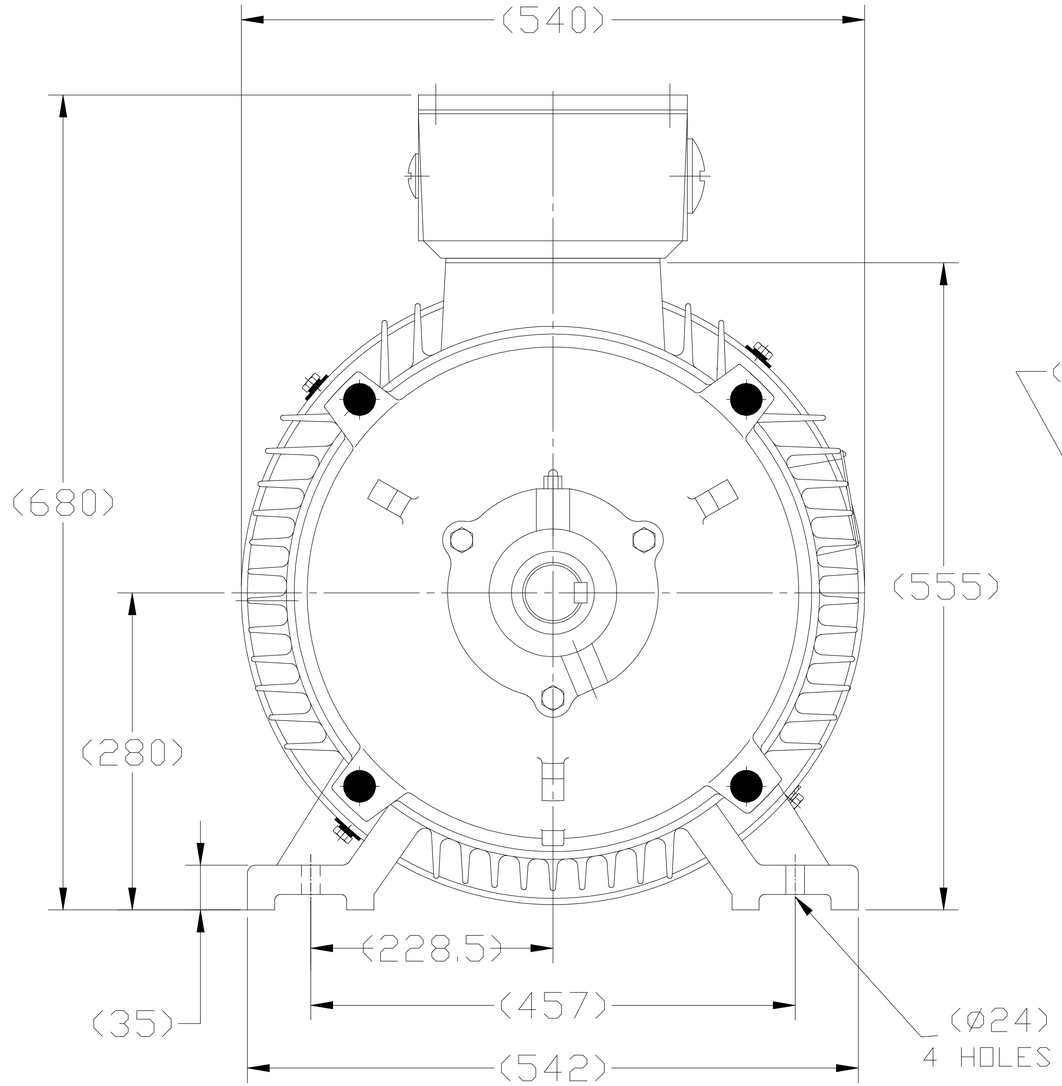

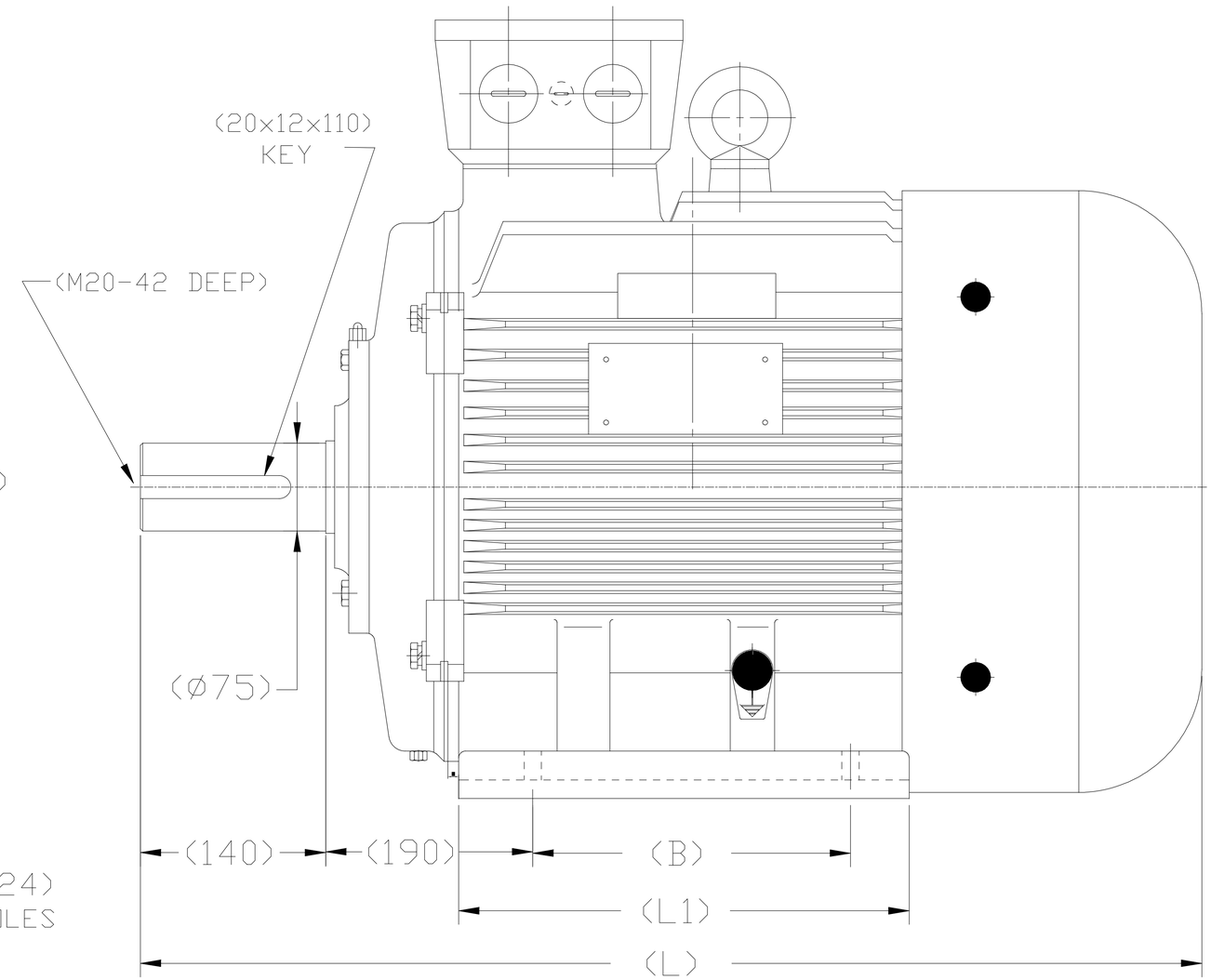

DRAWING MAY NOT BE TO SCALE

FRAME	B	L1	L
DF280S-6R	368	485	975
DF280M-6R	419	536	1026

NO.	REVISION	BY & DATE
C	REMOVED MARATHON PART NUMBERS ECO-0186668	WGJ 5-18-20

TOLERANCES UNLESS SPECIFIED

DEC.	INCHES
.X	±.1
.XX	±.03
.XXX	±.005
.XXXX	±.0005
ANG	±1/2

BW
CHK

REGAL — REGAL-BELOIT CORPORATION

TITLE: OUTLINE DF280S,M-6R-PREMIUM

MAT'L.
FINISH

DRAWN MOL 09-11-2012
CHK
APPD
SCALE
REF R502,R505
FMF HEBEI
PREV

THIS DRAWING IN DESIGN AND DETAIL IS OUR PROPERTY AND MUST NOT BE USED EXCEPT IN CONNECTION WITH OUR WORK ALL RIGHTS OF DESIGN AND INVENTION ARE RESERVED
THIS IS AN ELECTRONICALLY GENERATED DOCUMENT - DO NOT SCALE THIS PRINT

RFP
DIST
CAD FILE SS622382
SIZE B
DRAWING NO. SS622382
REV. C

WYE - DELTA STARTING USEABLE ON 2,4 AND 6 POLE MOTORS.

LOW VOLTAGE CONNECTION

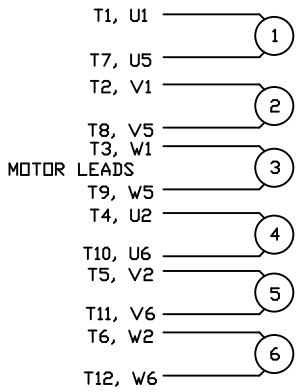

HIGH VOLTAGE CONNECTION

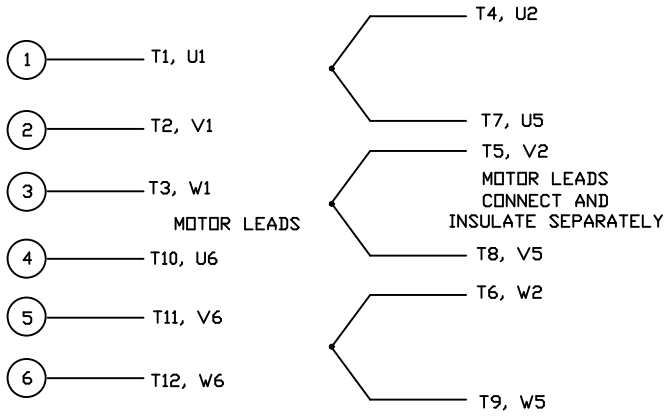

REFER TO THE WYE-DELTA STARTER CONNECTION INSTRUCTIONS FOR PROPER CONNECTION OF POWER LINES TO STARTER.

PART WINDING START USABLE ON 4 & 6 POLE MOTORS
LOW VOLTAGE CONNECTION ONLY

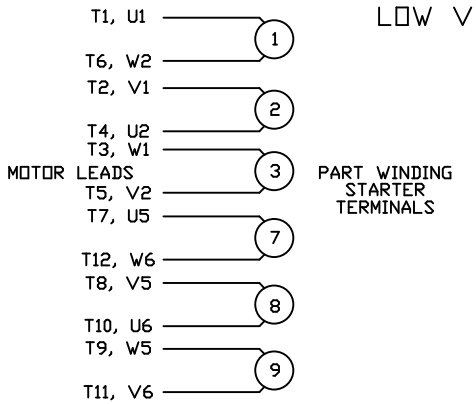

REFER TO THE PART WINDING STARTER INSTRUCTIONS FOR PROPER CONNECTION OF POWER LINES TO STARTER.

REFER TO THE CUTLER - HAMMER OR EQUIV. FOR PROPER SELECTION OF OVERLOAD HEATER COILS.

LINE LEADS

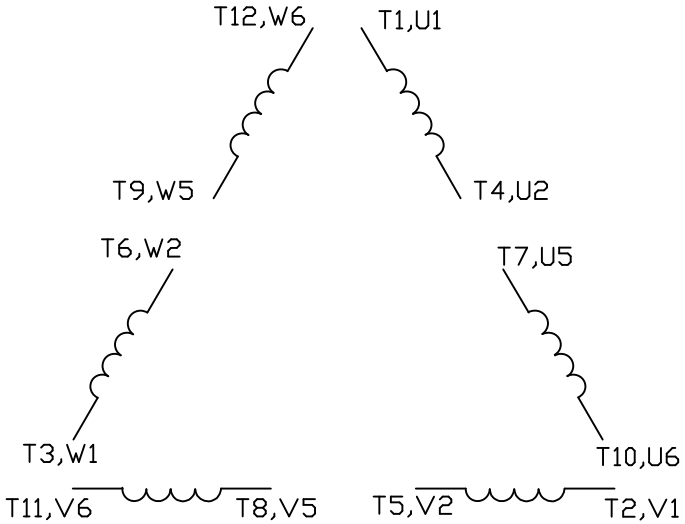

ROTATION CAN BE REVERSED BY INTERCHANGING ANY TWO LINE LEADS

12 LEAD DELTA CONNECTION ACROSS THE LINE START
(FOR Y START DELTA RUN, REMOVE THE JUMPERS)

LOW VOLTAGE
(MUST BE REWIRED AS SHOWN)

HIGH VOLTAGE
(FACTORY WIRED FOR HIGH VOLTAGE AS SHOWN)

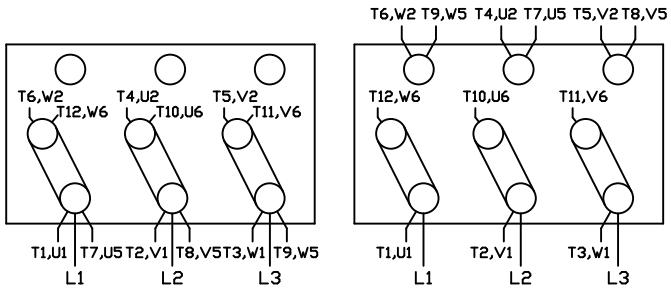

NO.	REVISION	BY & DATE	CHK

TOLERANCES UNLESS SPECIFIED

DEC.	INCHES
.X	±.1
.XX	±.01
.XXX	±.005
.XXXX	±.0005
ANG	±1/2°

MARATHON ELECTRIC

TITLE DELTA - WYE CONNECTION DIAGRAM
IEC CAST IRON MOTORS

MAT'L.
FINISH

DRAWN CJW 08/28/02
CHK
APPD
SCALE 1=1
REF
FMF
PREV

THIS DRAWING IN DESIGN AND DETAIL IS OUR PROPERTY AND MUST NOT BE USED EXCEPT IN CONNECTION WITH OUR WORK ALL RIGHTS OF DESIGN AND INVENTION ARE RESERVED
THIS IS AN ELECTRONICALLY GENERATED DOCUMENT - DO NOT SCALE THIS PRINT

RFP
DIST

CAD FILE 00417203ME

SIZE A
DRAWING NO. 004172-03ME
REV.

Uncontrolled Copy

CERTIFICATION DATA SHEET

Model#:	280MTFC6588 AA	**WINDING#:**	T22806016 NONE 3
CONN. DIAGRAM:	00417203ME	**ASSEMBLY:**	F3
OUTLINE:	SS622382		

TYPICAL MOTOR PERFORMANCE DATA

HP	KW	SYNC. RPM	F.L. RPM	FRAME	ENCLOSURE	KVA CODE	DESIGN
75&60	56&45	1200	1194&994	280M	TEFC	H	B

PH	Hz	VOLTS	FL AMPS	START TYPE	DUTY	INSL	S.F	AMB°C	ELEVATION
3	60/50	230/460#200/400	190/95&182/91	PWS & YDRUN OR INV	CONTINUOUS	F5	1.15/1.15	40	3300

FULL LOAD EFF: 94.5&94.5	3/4 LOAD EFF: 94.5	1/2 LOAD EFF: 93.6	GTD. EFF	ELEC. TYPE	NO LOAD AMPS
FULL LOAD PF: 78&75	3/4 LOAD PF: 73	1/2 LOAD PF: 63	94.1	SQ CAGE INV RATED	81 / 40.5

F.L. TORQUE	LOCKED ROTOR AMPS	L.R. TORQUE	B.D. TORQUE	F.L. RISE°C
330 LB-FT	1250 / 625	720 LB-FT 218	820 LB-FT 248	50

SOUND PRESSURE @ 3 FT.	SOUND POWER	ROTOR WK^2	MAX. WK^2	SAFE STALL TIME	STARTS /HOUR	APPROX. MOTOR WGT
55 dBA	65 dBA	- LB-FT^2	- LB-FT^2	25 SEC.	2	- LBS.

*** SUPPLEMENTAL INFORMATION ***

DE BRACKET TYPE	ODE BRACKET TYPE	MOUNT TYPE	ORIENTATION	SEVERE DUTY	HAZARDOUS LOCATION	DRIP COVER	SCREENS	PAINT
STANDARD	STANDARD	RIGID	HORIZONTAL	PREMIUM SEVERE DUTY	NONE	FALSE	NONE	BLUE (ENAMEL)

BEARINGS		GREASE	SHAFT TYPE	SPECIAL DE	SPECIAL ODE	SHAFT MATERIAL	FRAME MATERIAL
DE	OPE						
BALL	BALL	POLYREX EM	STANDARD IEC	NONE	NONE	1045 HOT ROLLED (C-204)	CAST IRON
6317	6314						

THERMO-PROTECTORS				THERMISTORS	CONTROL	SPACE /n HEATERS
THERMOSTATS	PROTECTORS	WDG RTDs	BRG RTDs			
NONE	NOT	NONE	NONE	NONE	FALSE	NONE VOLTS

If Inverter equals NONE, contact factory for further information

INVERTER TORQUE: CONSTANT 2:1
INV. HP SPEED RANGE: 1.5 X BASE SPEED

ENCODER: NONE
NONE NONE
NONE NONE PPR

BRAKE: NONE NONE
NONE P/N NONE
NONE NONE
NONE FT-LB NONE V NONE Hz

*
N
O
T
E
S
*

DATE: 06/23/2017 07:28:22 AM
FORM 3531 REV.3 02/07/99
** Subject to change without notice.

Uncontrolled Copy

Data Sheet

Date: 19-06-2017
Customer:
Attention:
Submitted by: FAREEDA DUDEKULA

marathon electric

280MTFC6588

Submittal

Data @ 460 V

Motor Load Data

Load	0%	25%	50%	75%	100%	115%	125%	LR	
Current (Amps)	40.5	46.5	59.0	75.5	95.0	108	116	625	
Torque (ft-lb)	0.00	82.0	165	247	330	380	413	720	
RPM	1200	1198	1197	1196	1194	1,193	1192	0	
Efficiency (%)		89.5	93.6	94.5	94.5	94.5	94.5		
P.F. (%)	4.5	42.0	63.0	73.0	78.0	79.0	80.0	33.0	

Motor Speed Data

	LR	Pull-Up	BD	Rated	Idle
Speed (RPM)	0	600	1140	1194	1200
Current (Amps)	625	575	345	95.0	40.5
Torque (ft-lb)	720	525	820	330	0.00

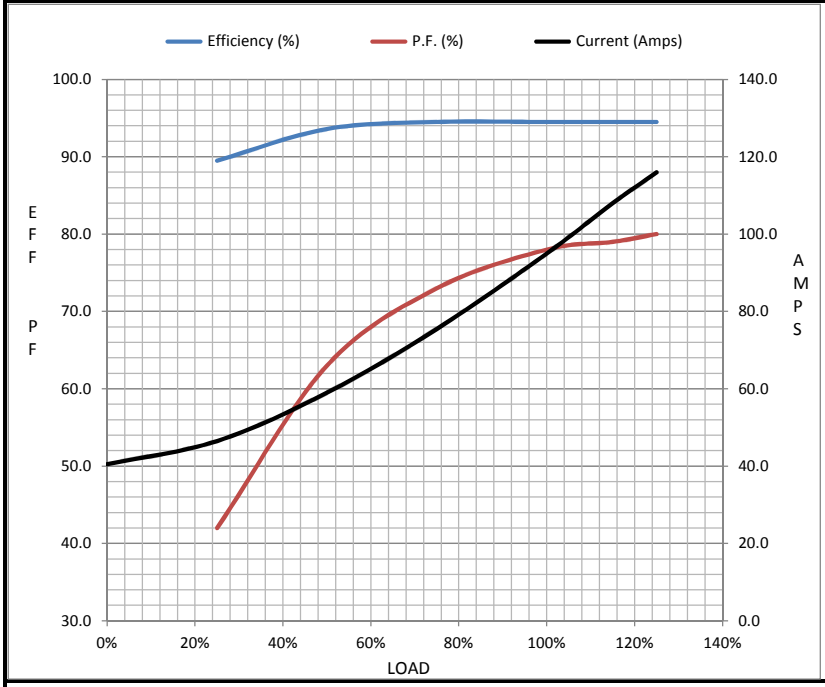

Information Block

HP	75.0	
Sync. RPM	1200	
Frame	444	
Enclosure	TEFC	
Construction	TFC	
Voltage	230/460#200/40(V	
Frequency	60	Hz
Design	A	
LR Code letter	H	
Service Factor	1.15	
Temp Rise @ FL	50	° C
Duty	CONT	
Ambient	40	° C
Elevation	1,000	feet
Rotor/Shaft wk²	0.00	Lb-Ft²
Ref Wdg	T22806016 NONE	
Sound Pressure @ 1M	55	dBA
VFD Rating	CONSTANT 2:1	
Outline Dwg	SS622382	
Conn. Diag	00417203ME	

Additional Specifications:
0
365THFS8036

EQUIV CKT (OHMS / PHASE)

R1	R2	X1	X2	Xm
0.0000	0.0000	0.0000	0.0000	0.0000
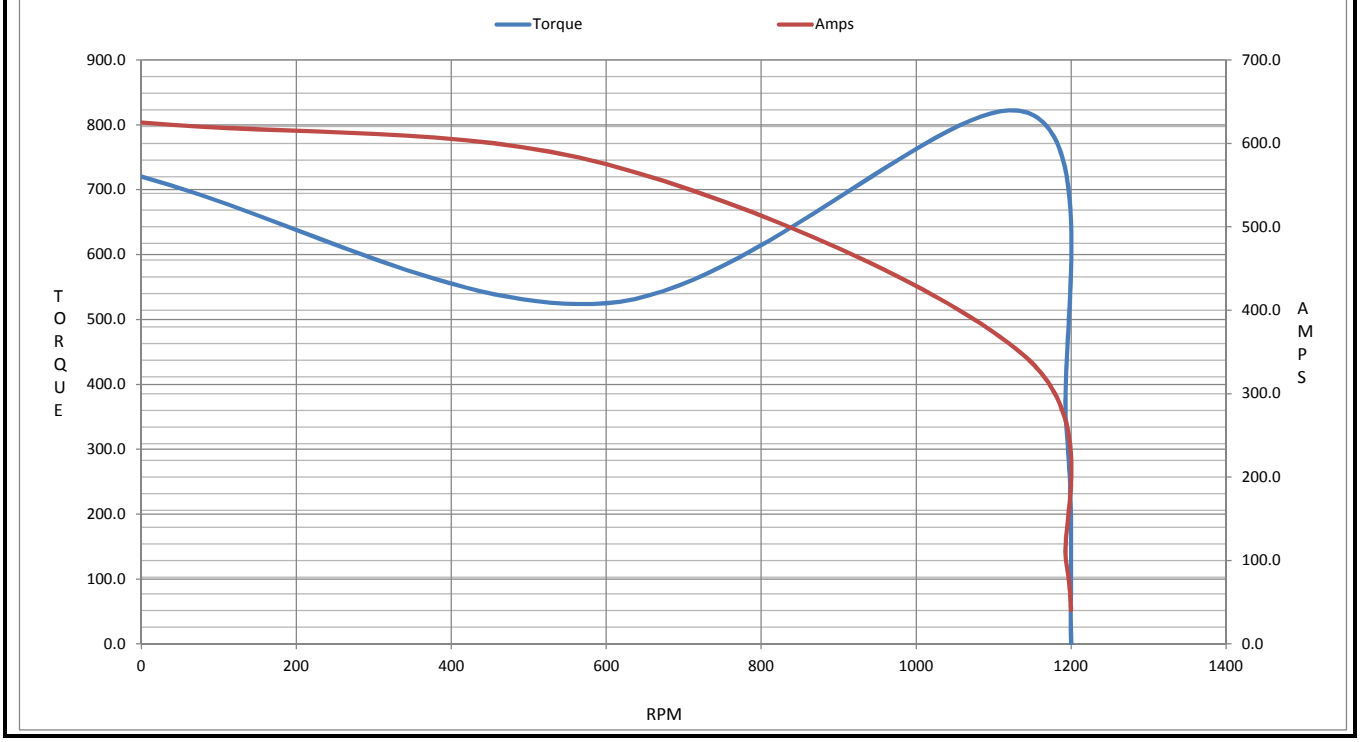
Speed -Torque Curve