PRODUCT INFORMATION PACKET

Model No: 199069.00
Catalog No: 199069.00
BSOLETE REPLACED BY B199069.00 ..50HP..3600RPM.326TSC.TEFC.230/460V.3PH.60HZ.CONT.40C.1.15SF.RIGI
-C.....GENERAL PURPOSE.....

Regal and Leeson are trademarks of Regal Rexnord Corporation or one of its affiliated companies.
Â©2023 Regal Rexnord Corporation, All Rights Reserved. MC017097E

Nameplate Specifications

Phase	3	Output HP	50 & 40 Hp
Output KW	37.0 & 30.0 kW	Voltage	230/460 & 190/380 V
Speed	3560 & 2970 rpm	Service Factor	1.15 & 1.0
Frame	326TSC	Enclosure	Totally Enclosed Fan Cooled
Thermal Protection	No Protection	Efficiency	93 & 93 %
Ambient Temperature	40 °C	Frequency	60 & 50 Hz
Current	111/55.5 & 100/50 A	Power Factor	90
Duty	Continuous	Insulation Class	F
Design Code	B	KVA Code	G
Drive End Bearing Size	6212	Opp Drive End Bearing Size	6212
UL	Recognized	CSA	Y
CE	N	IP Code	43
Number of Speeds	1		

Technical Specifications

Electrical Type	Squirrel Cage Inverter Rated	Starting Method	Line Or Inverter
Poles	2	Rotation	Reversible
Resistance Main	.102 Ohms	Mounting	Rigid Base
Motor Orientation	Horizontal	Drive End Bearing	Ball
Opp Drive End Bearing	Ball	Frame Material	Cast Iron
Shaft Type	TS	Assembly/Box Mounting	F1/F2 CAPABLE
Inverter Load	CONSTANT 2:1		
Outline Drawing	SS620302-326TSC	Connection Drawing	A-EE7308AA-LE

This is an uncontrolled document once printed or downloaded and is subject to change without notice. Date Created:06/22/2023

SS620302

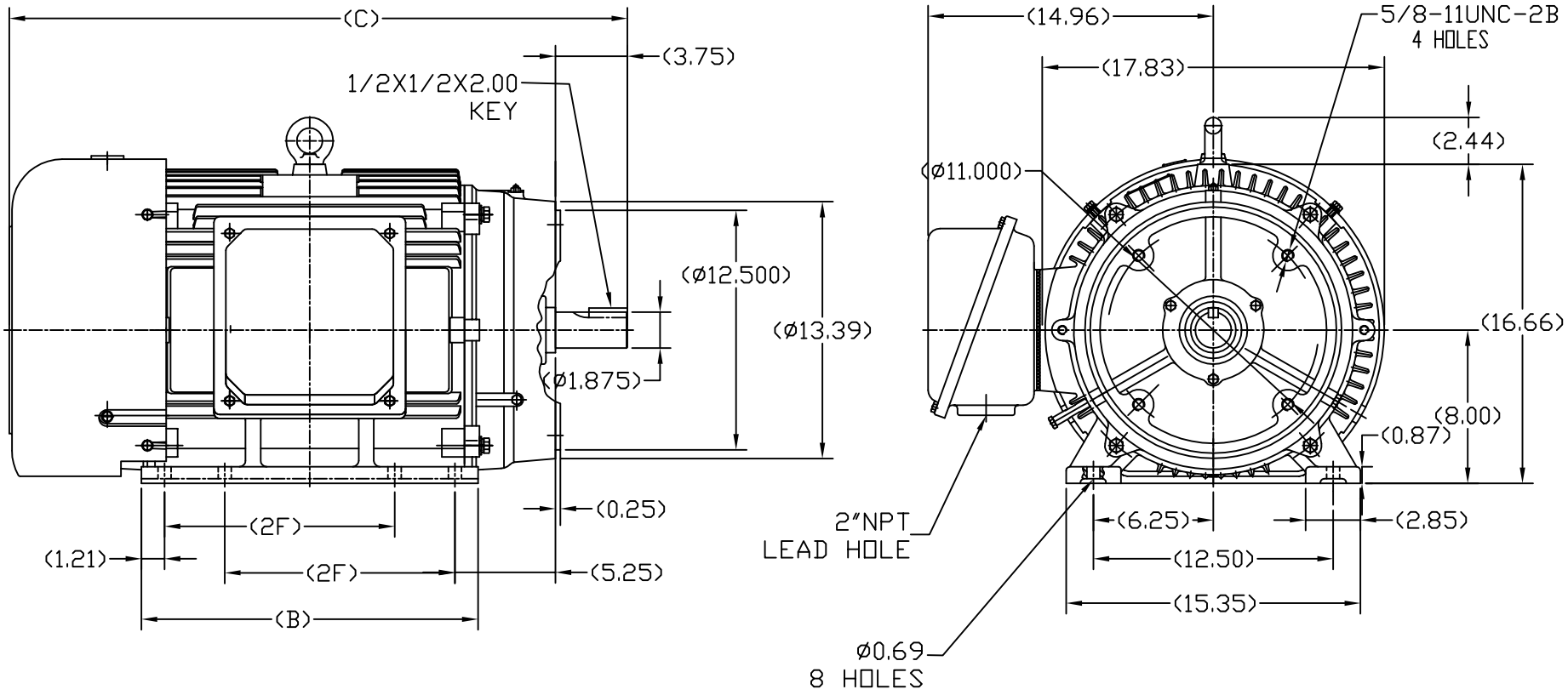

324TSC	31.18	16.38	10.50
326TSC	32.36	17.56	12.00
FRAME	C	B	2F

NO.	REVISION	BY & DATE

TOLERANCES UNLESS SPECIFIED

DEC.	INCHES
.X	±.1
.XX	±.03
.XXX	±.005
.XXXX	±.0005
CHK ANG	±1/2

REGAL-BELOIT CORPORATION

TITLE OUTLINE 324/326TSC FR-TEFC-CAST IRON

MAT'L.

FINISH

CAD FILE SS620302

RFP

DIST

DRAWN SY 4-21-2010
CHK HZJ 4-21-2010
APPD CL 4-21-2010
SCALE 1=7
REF
FMF HWADA
PREV

SIZE B
DRAWING NO. SS620302
REV.

THIS DRAWING IN DESIGN AND DETAIL IS OUR PROPERTY AND MUST NOT BE USED EXCEPT IN CONNECTION WITH OUR WORK ALL RIGHTS OF DESIGN AND INVENTION ARE RESERVED
THIS IS AN ELECTRONICALLY GENERATED DOCUMENT - DO NOT SCALE THIS PRINT

Uncontrolled Copy

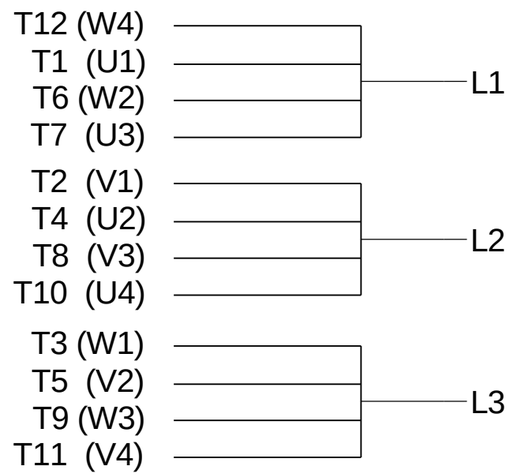

LOW VOLTAGE

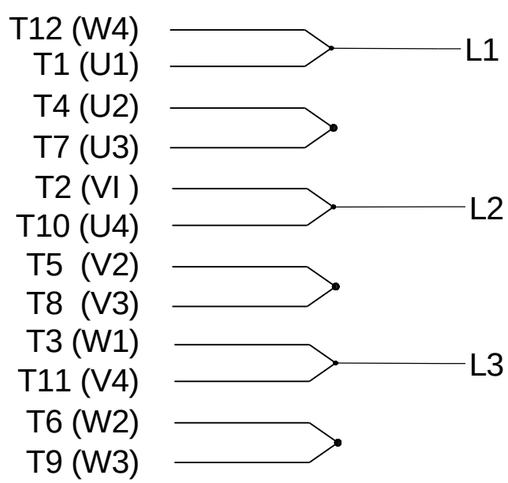

HIGH VOLTAGE

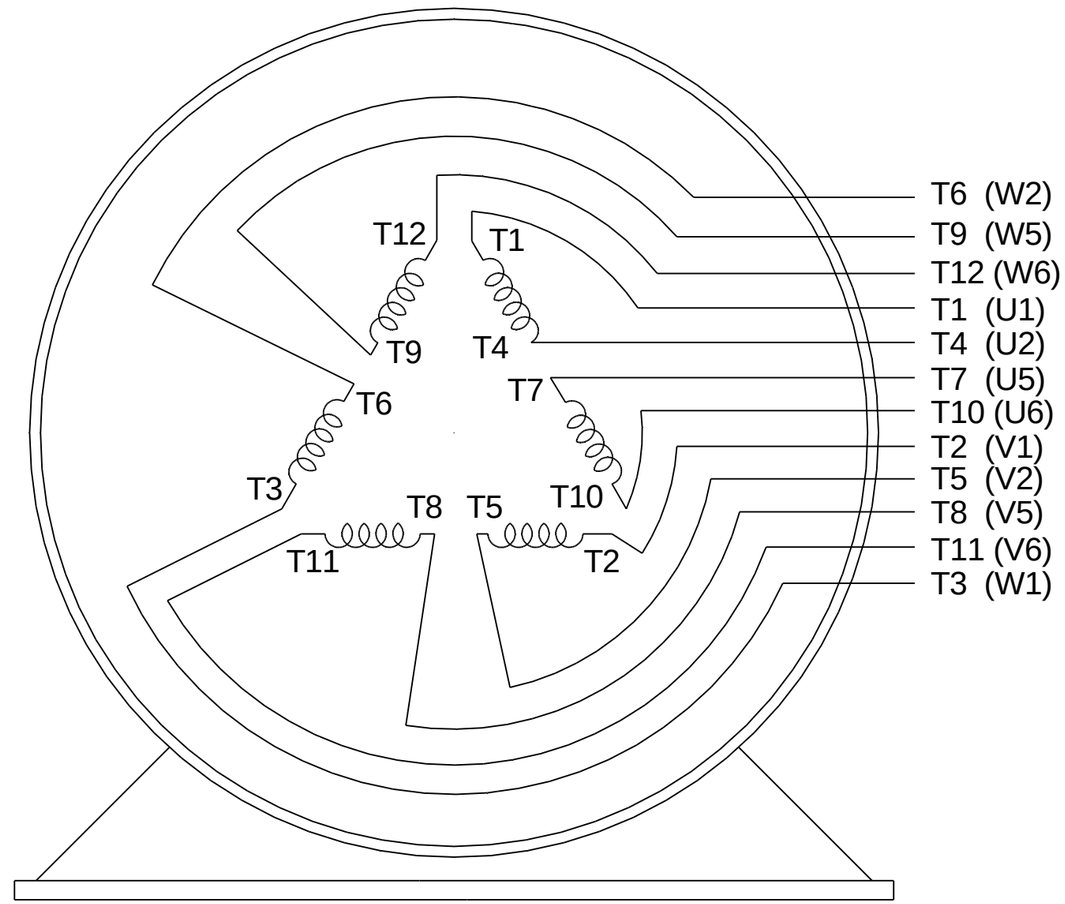

VIEW OF TERMINAL END

DRAWING REVISION	REVISION BY	DATE
C	D.FROEHLICH	02-09-2015
ECO: ECO-0070906	APPROVED BY: MG	DATE: 02-09-2015

ECO DESCRIPTION: UPDATED IEC CONNECTIONS

COPYRIGHT REGAL BELOIT AMERICA, INC. ALL RIGHTS RESERVED. PROPRIETARY AND CONFIDENTIAL INFORMATION - THIS DOCUMENT IS THE PROPERTY OF REGAL BELOIT AMERICA, INC. ("OWNER") AND CONTAINS OWNER'S PROPRIETARY INFORMATION. ANY PERSON, CORPORATION OR OTHER FIRM RECEIVING IT IS DEEMED, BY RECEIVING IT, TO AGREE THAT IT, AND/OR ANY PART OF IT, SHALL NOT BE DISCLOSED TO ANY PERSON, CORPORATION OR OTHER ENTITY, DUPLICATED, AND/OR USED, EXCEPT AS EXPRESSLY APPROVED IN WRITING IN ADVANCE BY OWNER. THIS DOCUMENT SHALL BE RETURNED TO OWNER UPON REQUEST. IT MAY BE SUBJECT TO CERTAIN RESTRICTIONS UNDER APPLICABLE EXPORT CONTROL LAWS AND REGULATIONS.

TOLERANCES UNLESS OTHERWISE SPECIFIED:

DEC.	INCH	mm	ANGLE
.X	±0.1	[±2.5]	±7' 30"
.XX	±0.02	[±0.51]	
XXX	±0.005	[±0.127]	
.XXXX	±0.0005	[±0.0127]	

REMOVE BURRS & BREAK SHARP EDGES: .003/.015 [.076/.381]
CORNER FILLETS: .02 [.51]
MACHINED SURFACES: 200 INCH / 5.1 mm
mm SHOWN IN [BRACKETS]

DRAWN BY	HV
DATE	06-08-20152
APPROVED BY	DR
DATE	06-11-2012
REFERENCE	
THIRD ANGLE PROJECTION	

Regal Beloit America, Inc.

DESCRIPTION: CONN DIAGRAM-EXTERNAL
3 PHASE - 2/1 DELTA - 12 LEADS

MATERIAL | PROCESS/FINISH

SIZE	DRAWING NUMBER	SHEET
A	EE7308AA-LE	1 OF 1

Uncontrolled Copy

LEESON

CERTIFICATION DATA SHEET

1051 CHEYENNE AVE.
GRAFTON, WI 53024
PH. 262-377-8810

CONN. DIAGRAM: A-EE7308AA-LE

CATALOG #: 199069.00

OUTLINE: B-SS620302

MOUNTING: F1/F2 CAPABLE

WINDING #: CHT32620001 1

TYPICAL MOTOR PERFORMANCE DATA

HP	kW	SYNC. RPM	F.L. RPM	FRAME	ENCLOSURE	KVA CODE	DESIGN
50&40	37.0&30.0	3600	3560&2970	326TSC	TEFC	G	B

PH	Hz	VOLTS	AMPS	START TYPE	DUTY	INSL	S.F.	AMB°C
3	60/50	230/460&190/380	111/55.5&100/50	LINE OR INVERTER	CONTINUOUS	F1	1.15/1.0	40

FULL LOAD EFF:	93&93	**3/4 LOAD EFF:**	93	**1/2 LOAD EFF:**	93	**GTD. EFF**	**ELEC. TYPE**
FULL LOAD PF:	90&90	**3/4 LOAD PF:**	88	**1/2 LOAD PF:**	83	92.4	SQ CAGE INV RATED

F.L. TORQUE	LOCKED ROTOR AMPS	L.R. TORQUE	B.D. TORQUE	F.L. RISE°C
73.5 **LB-FT**	724 / 362	135 **LB-FT** 182 %	195 **LB-FT** 265 %	70

SOUND PRESSURE @ 3 FT.	SOUND POWER	ROTOR WK^2	MAX. WK^2	SAFE STALL TIME	STARTS / HOUR	APPROX. MOTOR WGT
75 **dBA**	85 **dBA**	5.6 **LB-FT^2**	27 **LB-FT^2**	15 **SEC.**	2	800 **LBS.**

***** SUPPLEMENTAL INFORMATION *****

DE BRACKET TYPE	ODE BRACKET TYPE	MOUNT TYPE	ORIENTATION	SEVERE DUTY	HAZARDOUS LOCATION	DRIP COVER	SCREENS	PAINT
C-FACE	STANDARD	RIGID	HORIZONTAL	FALSE	NONE	FALSE	NONE	BLUE (ENAMEL)

BEARINGS		GREASE	SHAFT TYPE	SPECIAL DE	SPECIAL ODE	SHAFT MATERIAL	FRAME MATERIAL
DE	ODE						
BALL	BALL	POLYREX EM	TS	NONE	NONE	AISI 1045 (C-240)	CAST IRON
6212	6212						

THERMO-PROTECTORS				THERMISTORS	CONTROL	SPACE HEATERS
THERMOSTATS	PROTECTORS	WDG RTDs	BRG RTDs			
NONE	NOT	NONE	NONE	NONE	FALSE	NONE **VOLTS**

*

N

O

T

E

S

INVERTER TORQUE: CONSTANT 2:1
INV. HP SPEED RANGE: NONE

ENCODER: NONE
NONE NONE
NONE NONE PPR

BRAKE: NONE NONE
NONE P/N NONE
NONE NONE
NONE FT-LB NONE V NONE Hz

Uncontrolled Copy

LEESON ELECTRIC CORPORATION

TYPICAL PERFORMANCE CURVE for AC MOTOR

Curve at 460 **Volts** **HP** 50&40 **PHASE** 3
60 **HZ**
50 **HP** **VOLTS** 230/460&190/380

Model No 199069.00

Catalog No 199069.00 **HZ** 60&50 **RPM** 3560&2970

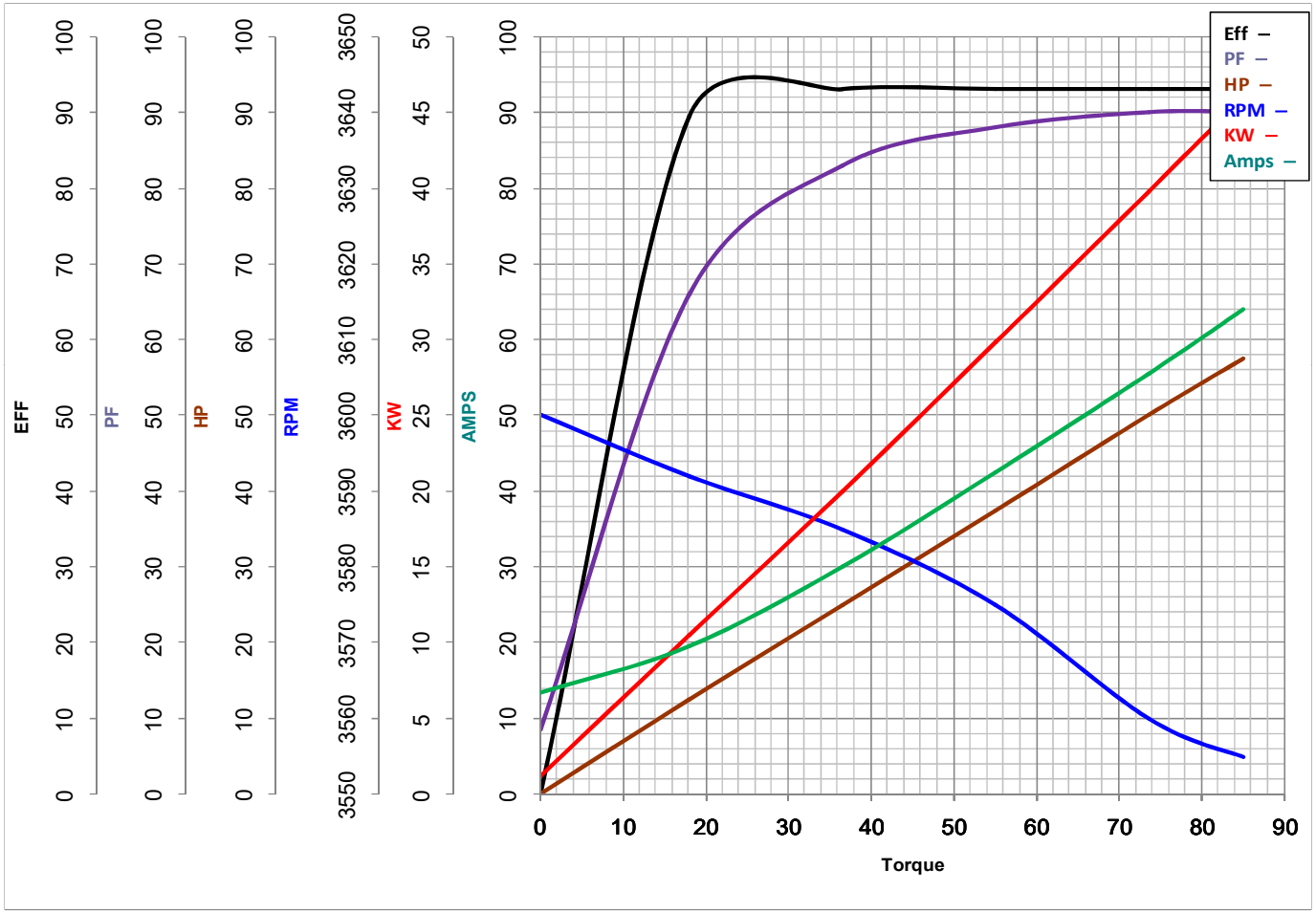

Torque in Lb.Ft

FL TORQUE	73.5	**Lb.Ft**	**FL AMPS**	111/55.5	
BD TORQUE	195.0	**Lb.Ft**	**PU TORQUE**	115.0	**Lb.Ft**
LR TORQUE	135	**Lb.Ft**	**LR AMPS**	362	
WINDING	CHT32620001-1		**Date**	**12/13/2018**	