PRODUCT INFORMATION PACKET

Model No: 511435AS-Y
Catalog No: 511435AS-Y
B-511435AS-Y BRKT MCH/313/LKD/D/MGS

Regal and Marathon are trademarks of Regal Rexnord Corporation or one of its affiliated companies.
©2025 Regal Rexnord Corporation, All Rights Reserved. MC017097E

Nameplate Specifications

Technical Specifications

This is an uncontrolled document once printed or downloaded and is subject to change without notice. Date Created:04/04/2025

Uncontrolled Copy

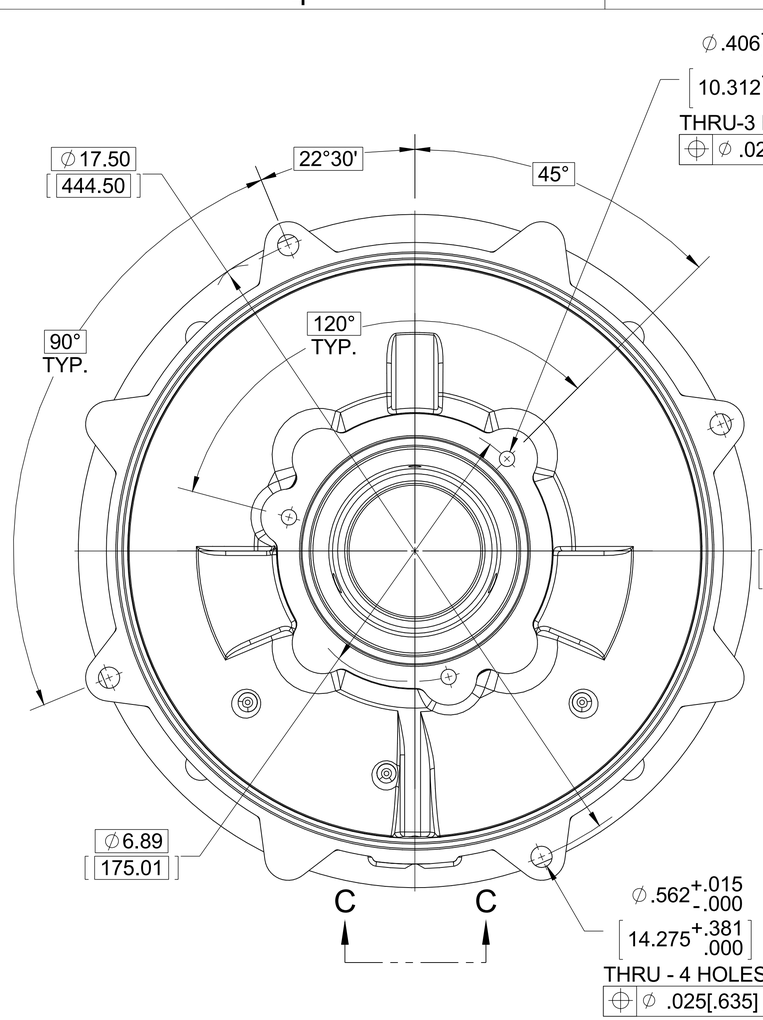

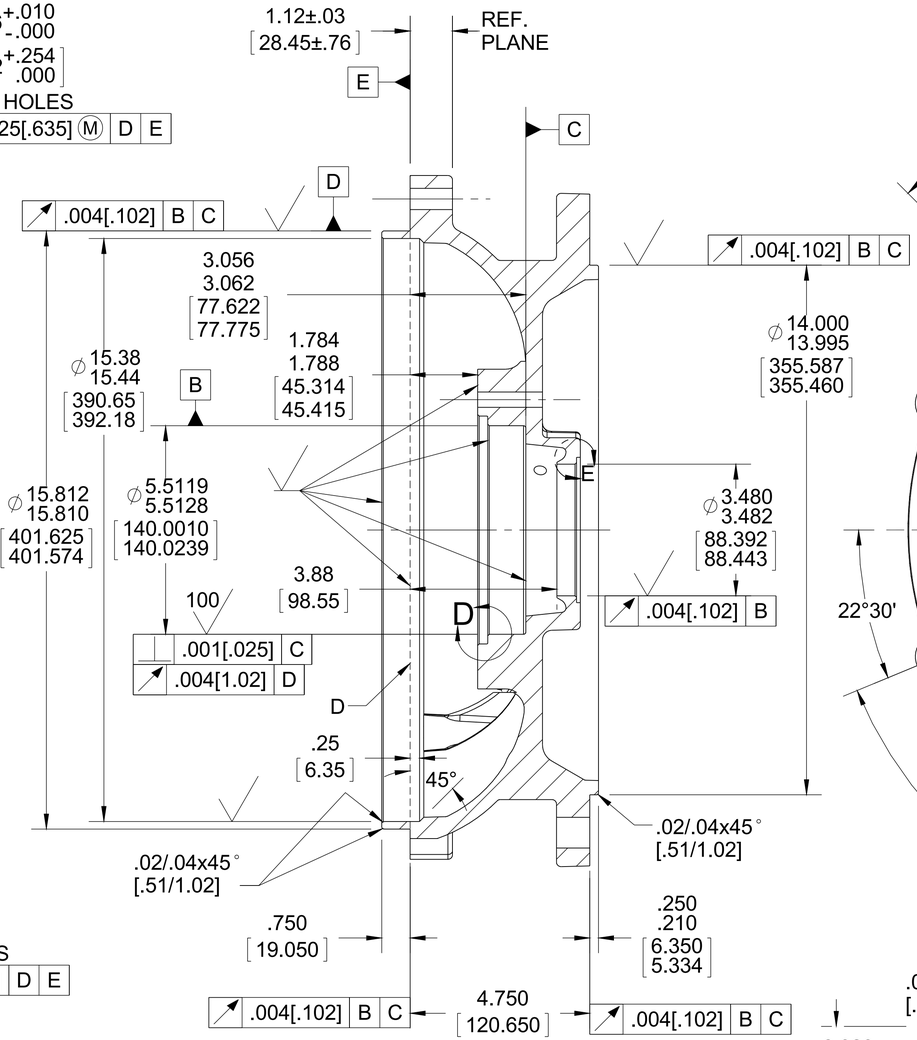

SECTION A-A

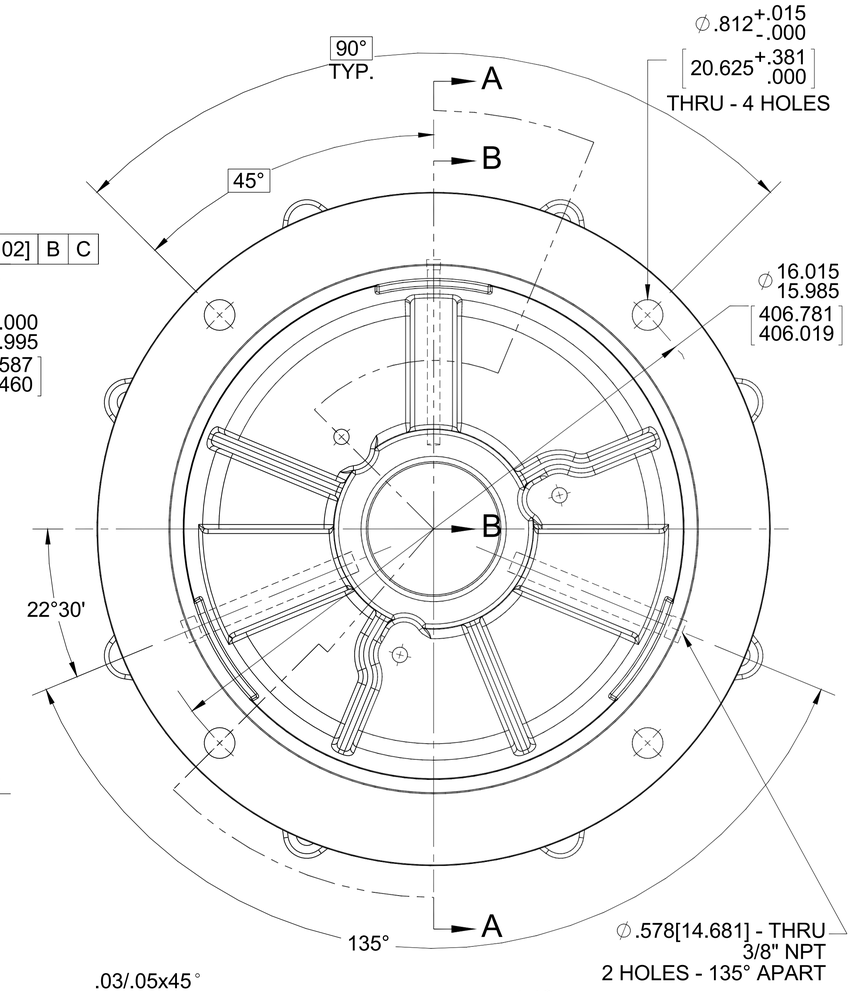

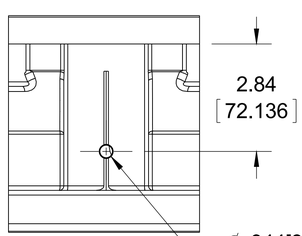

SECTION C-C

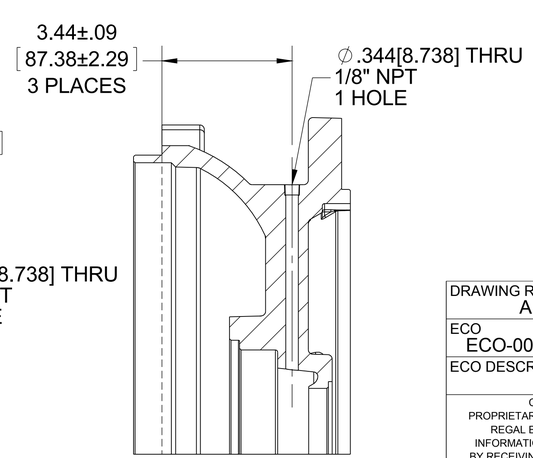

SECTION B-B

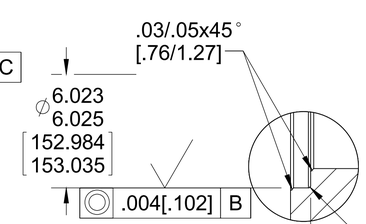

DETAIL D

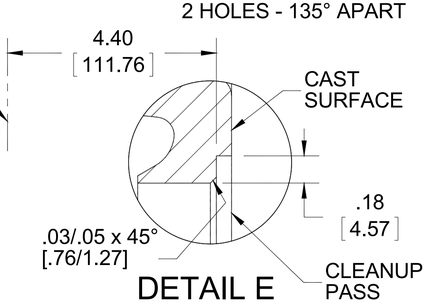

DETAIL E

DRAWING REVISION	REVISION BY	DATE
A		
ECO: ECO-0092629	APPROVED BY	DATE
ECO DESCRIPTION: NEW DRAWING		

COPYRIGHT REGAL BELOIT AMERICA, INC. ALL RIGHTS RESERVED.
PROPRIETARY AND CONFIDENTIAL INFORMATION - THIS DOCUMENT IS THE PROPERTY OF REGAL BELOIT AMERICA, INC. ("OWNER") AND CONTAINS OWNER'S PROPRIETARY INFORMATION. ANY PERSON, CORPORATION OR OTHER FIRM RECEIVING IT IS DEEMED, BY RECEIVING IT, TO AGREE THAT IT, AND/OR ANY PART OF IT, SHALL NOT BE DISCLOSED TO ANY PERSON, CORPORATION OR OTHER ENTITY, DUPLICATED, AND/OR USED, EXCEPT AS EXPRESSLY APPROVED IN WRITING IN ADVANCE BY OWNER. THIS DOCUMENT SHALL BE RETURNED TO OWNER UPON REQUEST. IT MAY BE SUBJECT TO CERTAIN RESTRICTIONS UNDER APPLICABLE EXPORT CONTROL LAWS AND REGULATIONS.

TOLERANCES UNLESS OTHERWISE SPECIFIED:

DEC.	INCH	mm	ANGLE
.X	±0.1	[±2.5]	±7' 30"
.XX	±0.02	[±0.51]	
XXX	±0.005	[±0.127]	
.XXXX	±0.0005	[±0.0127]	

REMOVE BURRS & BREAK SHARP EDGES: .003/.015 [.076/.381]
CORNER FILLETS: .02 [.51]
MACHINED SURFACES: 200 INCH / 5.1 mm
mm SHOWN IN [BRACKETS]

DRAWN BY	JJB
DATE	01-18-2016
APPROVED BY	DJK
DATE	01-27-2016
REFERENCE	
THIRD ANGLE PROJECTION	

REGAL™ Regal Beloit America, Inc.

DESCRIPTION
END FRAME-MACHINED
360 FR. - TEFC - D'FLANGE - 312 BRG - REAR - MGS

MATERIAL	PROCESS/FINISH

SIZE	DRAWING NUMBER	SHEET
B	511435AS	1 OF 1